FOR CONSTRUCTION DRAWINGS
OF
COAL HANDLING SYSTEM
FOR
Mong Duong II 2 x 560 MW COAL FIRED POWER PLANT

ITEM : COMPONENT

2013.02.05

DOOSAN

두산중공업주식회사

Doosan Heavy Industries & Construction Co., Ltd.

A1(841x594m/m)

CONTENTS.

1. CONVEYOR MOTOR
2. CONVEYOR REDUCER
3. CONVEYOR COUPLING
4. CONVEYOR BREAK
5. CONVEYOR BACK-STOP
6. CONVEYOR IDLER
7. CONVEYOR BELT CLEANER
8. CONVEYOR PULLEY
9. DIVERTER GATE

1. CONVEYOR MOTOR

A0 (841 x 1189mm)

DRAWING LIST

NO	DWG. NO	DWG. TITLE	REVISION						REMARK	NO	DWG. NO	DWG. TITLE	REVISION						REMARK
			0	1	2	3	4	5					0	1	2	3	4	5	
1	T10206-XW03-P0ECC00-628001	COAL HANDLING SYSTEM CV-01A BELT CONVEYOR MOTOR OUTLINE DIMENSION	2013-02-05																
2	T10206-XW03-P0ECC00-628002	COAL HANDLING SYSTEM CV-01B BELT CONVEYOR MOTOR OUTLINE DIMENSION	2013-02-05																
3	T10206-XW03-P0ECC00-628004	COAL HANDLING SYSTEM CV-02A BELT CONVEYOR MOTOR OUTLINE DIMENSION	2013-02-05																
4	T10206-XW03-P0ECC00-628005	COAL HANDLING SYSTEM CV-02B BELT CONVEYOR MOTOR OUTLINE DIMENSION	2013-02-05																
5	T10206-XW03-P0ECC00-628007	COAL HANDLING SYSTEM CV-03A BELT CONVEYOR MOTOR OUTLINE DIMENSION	2013-02-05																
6	T10206-XW03-P0ECC00-628008	COAL HANDLING SYSTEM CV-03B BELT CONVEYOR MOTOR OUTLINE DIMENSION	2013-02-05																
7	T10206-XW03-P0ECC00-628010	COAL HANDLING SYSTEM CV-04AB BELT CONVEYOR MOTOR OUTLINE DIMENSION	2013-02-05																
8	T10206-XW03-P0ECC00-628012	COAL HANDLING SYSTEM CV-05A BELT CONVEYOR MOTOR OUTLINE DIMENSION	2013-02-05																
9	T10206-XW03-P0ECC00-628014	COAL HANDLING SYSTEM CV-05B BELT CONVEYOR MOTOR OUTLINE DIMENSION	2013-02-05																
10	T10206-XW03-P0ECC00-628015	COAL HANDLING SYSTEM CV-06A BELT CONVEYOR MOTOR OUTLINE DIMENSION	2013-02-05																
11	T10206-XW03-P0ECC00-628016	COAL HANDLING SYSTEM CV-06B BELT CONVEYOR MOTOR OUTLINE DIMENSION	2013-02-05																

? ???? ??? ??? (?)??? ???? ??? ?? ???? ?? ????? ????. The information written in this drawing is HYOSUNG's property, and may not be disclosed and/or reproduced without the prior official permission of HYOSUNG Corp.

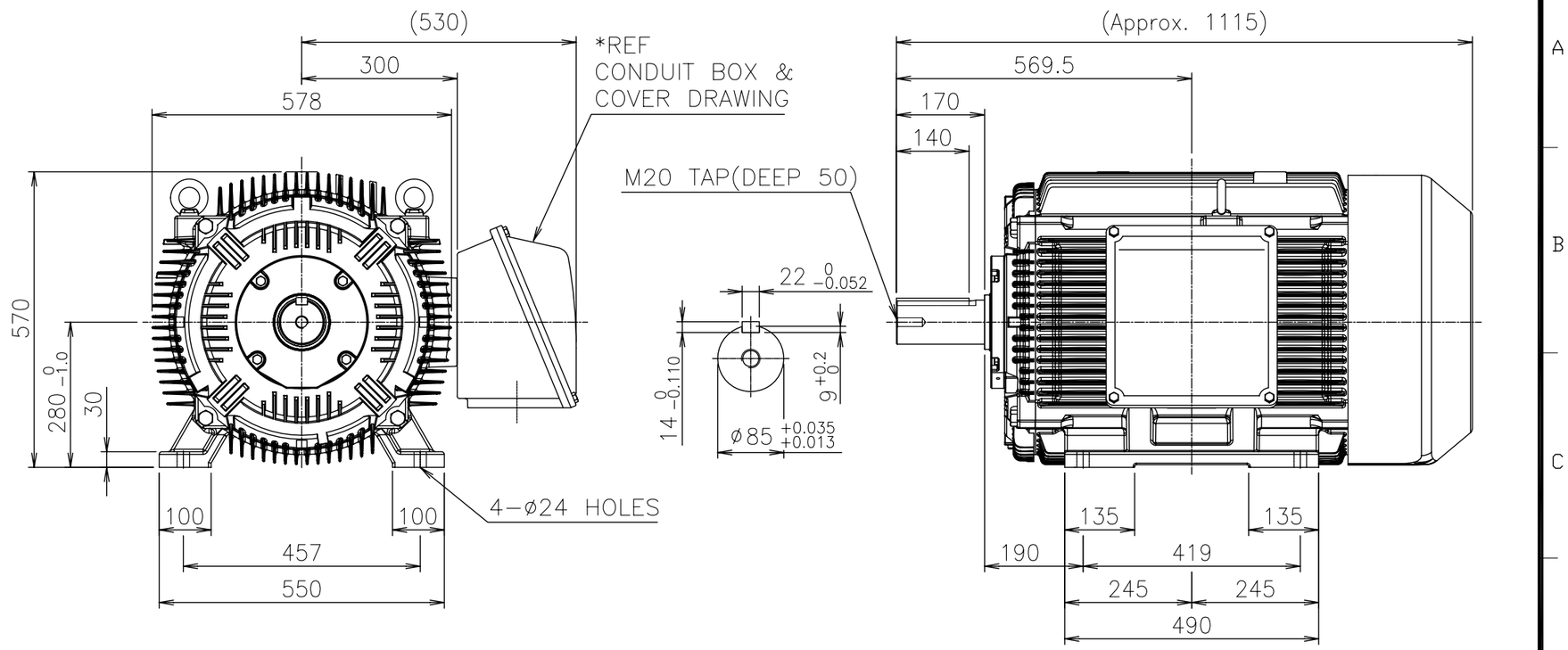

CONV.NO.	Q'TY
CV-01A	1

<NOTE>

1) THE CONDUIT BOX MAY BE ROTATED STEPS OF 90°.

2) STEEL HOOD & CAST IRON C/B.

TYPE AC MOTOR TEFC FR.280M 4P~

DWG. NAME OUTLINE DIMENSIONS

DRAWN	DESIGN	CHECKED	REVIEWED	APPROVED	SCALE	1/11	DATE	2012-04-13
					REF. DWG. NO.		UNIT	mm

HYOSUNG

DWG. NO. DMMK11785H02 0

양식CE-14-0100-3A4R

FOR CONSTRUCTION

THIS DRAWING IS THE PROPERTY OF DOOSAN HEAVY INDUSTRIES & CONSTRUCTION CO., LTD.
IT IS NOT TO BE COPIED OR USED IN ANY WAY DETRIMENTAL TO THE COMPANY.

Rev.	Date	Prepared	Checked	Approved	Details of Revision
0	05.02.2013	ILSIN	Y.I.MIN	J.S.PARK	FOR CONSTRUCTION

Owner: AES-VCM MONG DUONG POWER COMPANY LIMITED

Consultant: POWER ENGINEERING CONSULTING JOINT STOCK COMPANY 2

Contractor: Doosan Heavy Industries & Construction Co., Ltd.

Project: MONG DUONG II 2x560MW(NET) COAL FIRED POWER PROJECT

Orig-No. T10206 PC XW03 Type ECC

	Date	Name
Drawn	05.10.2011	ILSIN
Checked	05.10.2011	Y.I.MIN
Approved	05.10.2011	J.S.PARK
Dept.		

Scale NONE

Title: COAL HANDLING SYSTEM CV-01A BELT CONVEYOR MOTOR OUTLINE DIMENSION

Contracts Code P0

Doosan Heavy Industries & Construction Co., Ltd. Dept. Unit

Drawing No. T10206-XW03-P0ECC00-628001

Reg. No 628001 Rev. 0 Version

Page-No. 1/1

A0 (841 x 1189mm)

? ???? ??? ??? (?)??? ???? ??? ?? ???? ?? ????? ????. The information written in this drawing is HYOSUNG's property, and may not be disclosed and/or reproduced without the prior official permission of HYOSUNG Corp.

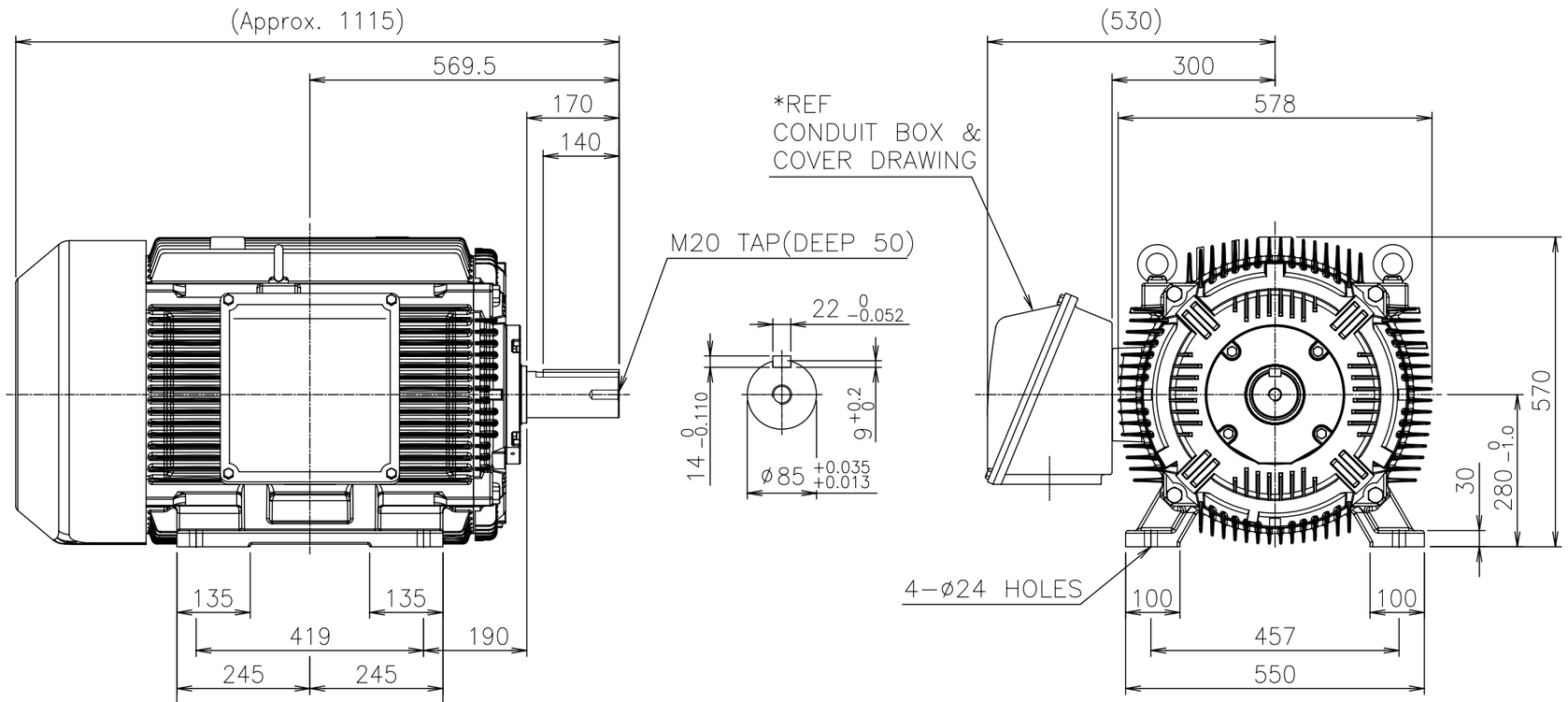

CONV.NO.	Q'TY
CV−01B	1

<NOTE>

1) THE CONDUIT BOX MAY BE ROTATED STEPS OF 90°.

2) STEEL HOOD & CAST IRON C/B.

TYPE AC MOTOR
TEFC FR.280M 4P~

DWG. NAME OUTLINE DIMENSIONS

DRAWN	DESIGN	CHECKED	REVIEWED	APPROVED

SCALE 1/11 | DATE 2012−04−13

REF. DWG. NO.

UNIT mm

HYOSUNG

DWG. NO. DMMK11785H01 (0)

양식CE−14−0100−3A4R

FOR CONSTRUCTION

THIS DRAWING IS THE PROPERTY OF DOOSAN HEAVY INDUSTRIES & CONSTRUCTION CO., LTD.
IT IS NOT TO BE COPIED OR USED IN ANY WAY DETRIMENTAL TO THE COMPANY.

Rev.	Date	Prepared	Checked	Approved	Details of Revision
0	05.02.2013	S.SIN	Y.I.MIN	J.S.PARK	FOR CONSTRUCTION

Owner: AES-VCM MONG DUONG POWER COMPANY LIMITED

Consultant: POWER ENGINEERING CONSULTING JOINT STOCK COMPANY 2

Contractor: Doosan Heavy Industries & Construction Co., Ltd.

Project: MONG DUONG II 2x560MW(NET) COAL FIRED POWER PROJECT

Orig-Pc: T10206
PC: XW03
Type: ECC
Contents Code: P0

	Date	Name
Drawn	05.10.2011	S.SIN
Checked	05.10.2011	Y.I.MIN
Approved	05.10.2011	J.S.PARK
Dept.		

Scale: NONE

Title: COAL HANDLING SYSTEM
CV−01B BELT CONVEYOR
MOTOR OUTLINE DIMENSION

Doosan Heavy Industries & Construction Co., Ltd. | Dept. | Unit

Reg. No: 628002
Rev.: 0 | Version:

Drawing No.: T10206−XW03−P0ECC00−628002

Page−No.: 1/1

A0 (841 x 1189mm)

? ???? ??? ??? (?)??? ???? ??? ?? ???? ?? ????? ????. The information written in this drawing is HYOSUNG's property, and may not be disclosed and/or reproduced without the prior official permission of HYOSUNG Corp.

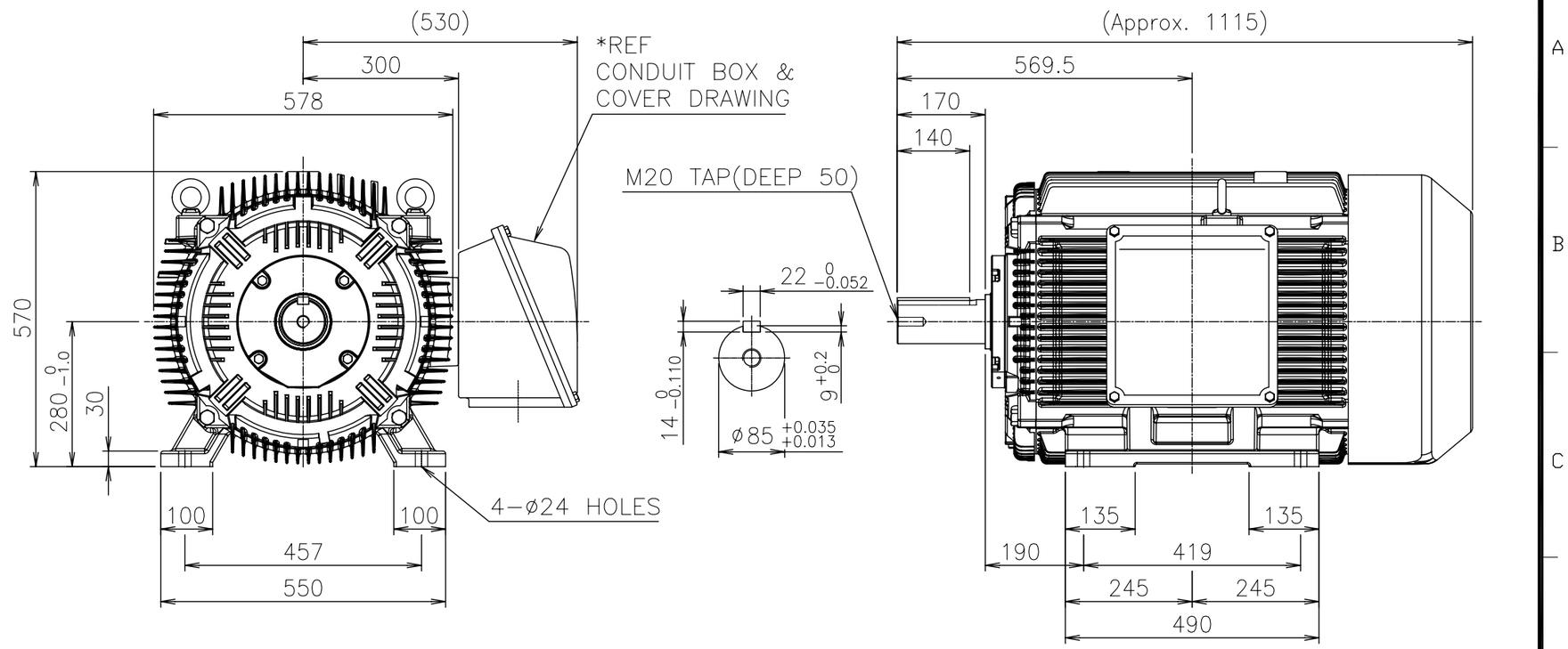

CONV.NO.	Q'TY
CV-02A	1

<NOTE>

1) THE CONDUIT BOX MAY BE ROTATED STEPS OF 90°.

2) STEEL HOOD & CAST IRON C/B.

TYPE	DWG. NAME
AC MOTOR TEFC FR.280M 4P~	OUTLINE DIMENSIONS

DRAWN	DESIGN	CHECKED	REVIEWED	APPROVED	SCALE	1/11	DATE	2012-04-13
					REF. DWG. NO.		UNIT	mm

HYOSUNG

DWG. NO. DMMK11785H04 (0)

양식CE-14-0100-3A4R

FOR CONSTRUCTION

THIS DRAWING IS THE PROPERTY OF DOOSAN HEAVY INDUSTRIES & CONSTRUCTION CO., LTD.
IT IS NOT TO BE COPIED OR USED IN ANY WAY DETRIMENTAL TO THE COMPANY.

Rev.	Date	Prepared	Checked	Approved	Details of Revision
0	05.02.2013	ILSIN	Y.I.MIN	J.S.PARK	FOR CONSTRUCTION

Owner: AES-VCM MONG DUONG POWER COMPANY LIMITED

Consultant: POWER ENGINEERING CONSULTING JOINT STOCK COMPANY 2

Contractor: Doosan Heavy Industries & Construction Co., Ltd.

Project: MONG DUONG II 2x560MW(NET) COAL FIRED POWER PROJECT

Orig-No. T10206 PC XW03 Type ECC

	Date	Name
Drawn	05.10.2011	ILSIN
Checked	05.10.2011	Y.I.MIN
Approved	05.10.2011	J.S.PARK
Dept.		

Scale NONE

Title: COAL HANDLING SYSTEM CV-02A BELT CONVEYOR MOTOR OUTLINE DIMENSION

Contract Code P0

Doosan Heavy Industries & Construction Co., Ltd. Dept. Unit

Drawing No. T10206-XW03-P0ECC00-628004

Reg. No 628004 Rev. 0 Version

Page-No. 1/1

A0 (841 x 1189mm)

? ???? ??? ??? (?)??? ???? ??? ?? ???? ?? ????? ????. The information written in this drawing is HYOSUNG's property, and may not be disclosed and/or reproduced without the prior official permission of HYOSUNG Corp.

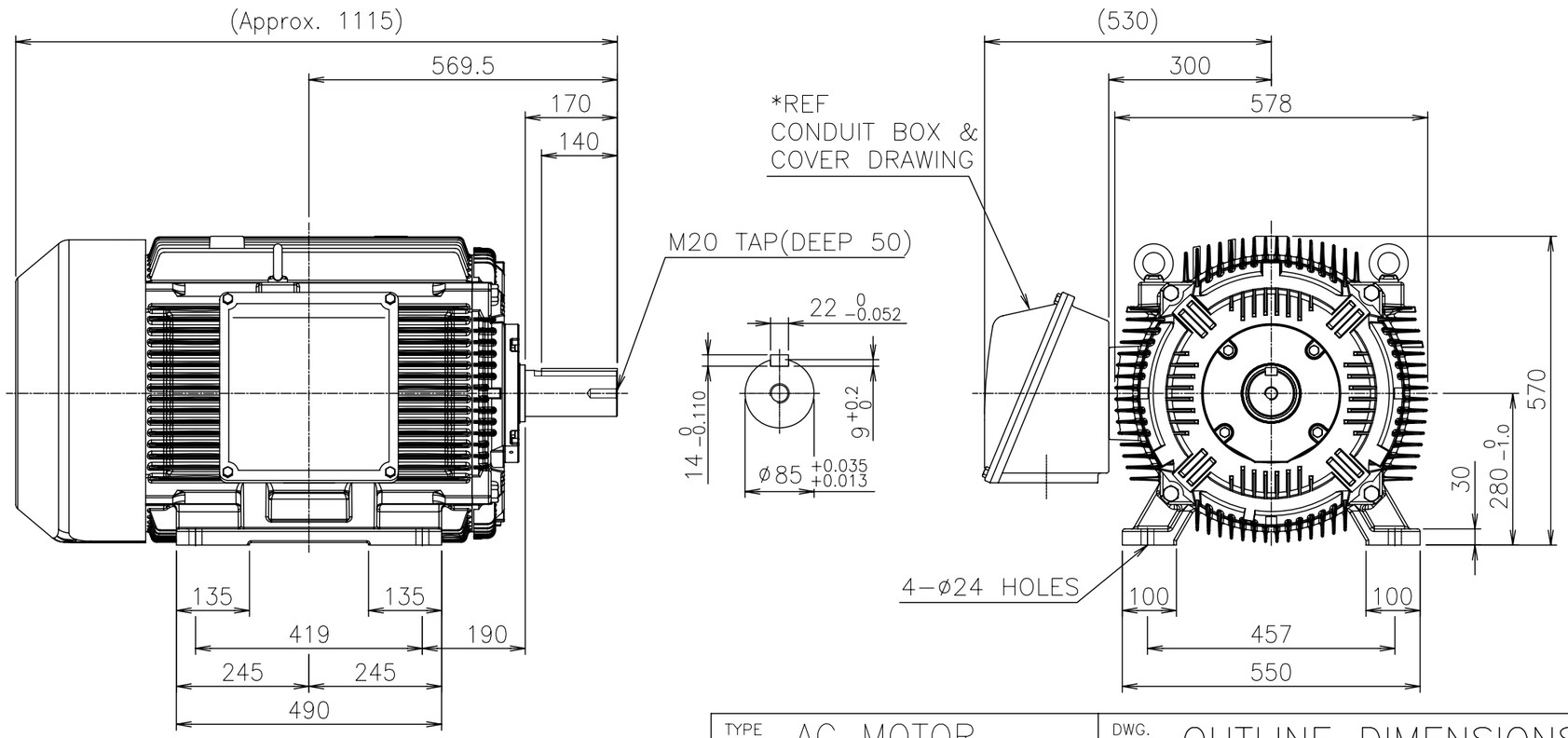

CONV.NO.	Q'TY
CV−02B	1

<NOTE>

1) THE CONDUIT BOX MAY BE ROTATED STEPS OF 90°.

2) STEEL HOOD & CAST IRON C/B.

TYPE AC MOTOR TEFC FR.280M 4P~

DWG. NAME OUTLINE DIMENSIONS

DRAWN	DESIGN	CHECKED	REVIEWED	APPROVED

SCALE 1/11 DATE 2012−04−13

REF. DWG. NO.

UNIT mm

HYOSUNG

DWG. NO. DMMK11785H03 △0

양식CE−14−0100−3A4R

FOR CONSTRUCTION

THIS DRAWING IS THE PROPERTY OF DOOSAN HEAVY INDUSTRIES & CONSTRUCTION CO., LTD.
IT IS NOT TO BE COPIED OR USED IN ANY WAY DETRIMENTAL TO THE COMPANY.

Rev.	Date	Prepared	Checked	Approved	Details of Revision
△	05.02.2013	S.SIN	Y.I.MIN	J.S.PARK	FOR CONSTRUCTION

Owner: AES-VCM MONG DUONG POWER COMPANY LIMITED

Consultant: POWER ENGINEERING CONSULTING JOINT STOCK COMPANY 2

Contractor: Doosan Heavy Industries & Construction Co., Ltd.

Project: MONG DUONG II 2x560MW(NET) COAL FIRED POWER PROJECT

Orig-Pc: T10206
PC: XW03
Type: ECC
Contents Code: P0

	Date	Name
Drawn	05.10.2011	S.SIN
Checked	05.10.2011	Y.I.MIN
Approved	05.10.2011	J.S.PARK
Dept.		

Scale: NONE

Title: COAL HANDLING SYSTEM CV−02B BELT CONVEYOR MOTOR OUTLINE DIMENSION

Doosan Heavy Industries & Construction Co., Ltd. Dept. Unit

Drawing No. T10206−XW03−P0ECC00−628005

Reg. No: 628005
Rev.: 0
Version:
Page−No.: 1/1

A0 (841 x 1189mm)

? ???? ??? ??? (?)??? ???? ??? ?? ???? ?? ????? ????. The information written in this drawing is HYOSUNG's property, and may not be disclosed and/or reproduced without the prior official permission of HYOSUNG Corp.

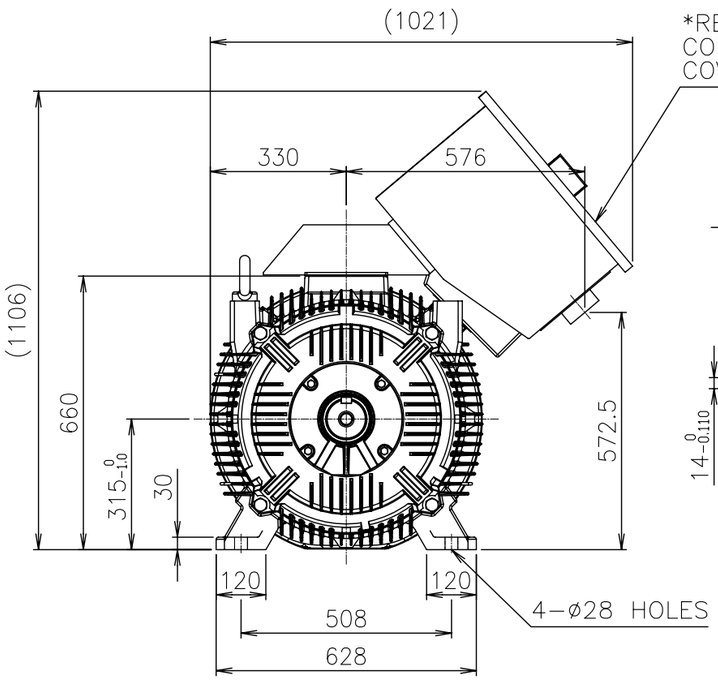

*REF.:
CONDUIT BOX &
COVER DRAWING

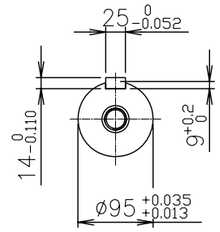

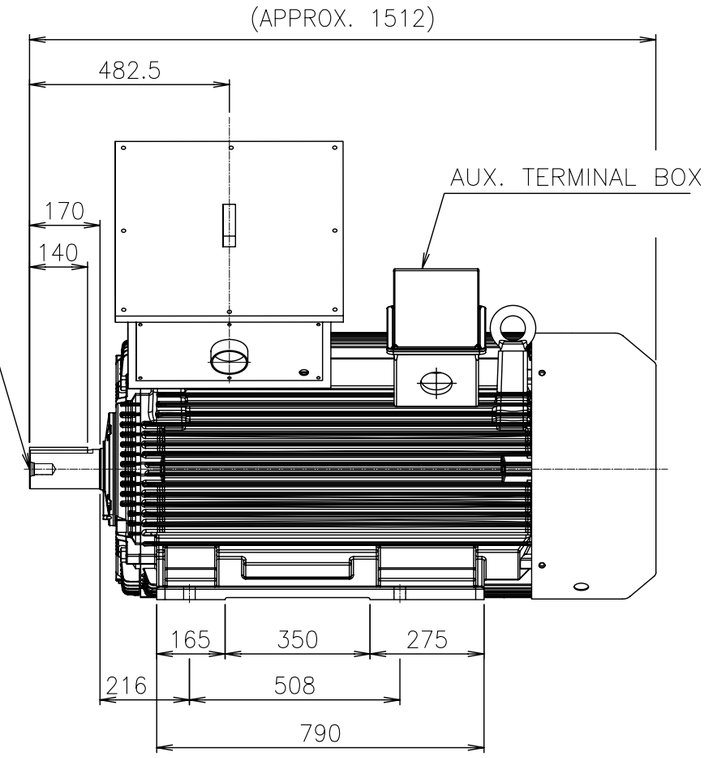

CONV.NO.	Q'TY
CV-03A	1

TYPE	DWG. NAME
AC MOTOR TE/EP FR.315L 6P~	OUTLINE DIMENSIONS

DRAWN	DESIGN	CHECKED	REVIEWED	APPROVED	SCALE	1/15	DATE	2012-04-13
					REF. DWG. NO.		UNIT	mm

HYOSUNG

DWG. NO. DMMK11785H08 (0)

양식CE-14-0100-3A4R

FOR CONSTRUCTION

THIS DRAWING IS THE PROPERTY OF DOOSAN HEAVY INDUSTRIES & CONSTRUCTION CO., LTD.
IT IS NOT TO BE COPIED OR USED IN ANY WAY DETRIMENTAL TO THE COMPANY.

Rev.	Date	Prepared	Checked	Approved	Details of Revision
0	05.02.2013	S.SIN	Y.I.MIN	J.S.PARK	FOR CONSTRUCTION

Owner: AES-VCM MONG DUONG POWER COMPANY LIMITED

Consultant: POWER ENGINEERING CONSULTING JOINT STOCK COMPANY 2

Contractor: Doosan Heavy Industries & Construction Co., Ltd.

Project: MONG DUONG II 2x560MW(NET) COAL FIRED POWER PROJECT

Orig-Pc: T10206
PC: XW03
Type: ECC
Contents Code: P0

	Date	Name
Drawn	05.10.2011	S.SIN
Checked	05.10.2011	Y.I.MIN
Approved	05.10.2011	J.S.PARK
Dept.		

Scale: NONE

Title: COAL HANDLING SYSTEM CV-03A BELT CONVEYOR MOTOR OUTLINE DIMENSION

Reg. No: 628007

Doosan Heavy Industries & Construction Co., Ltd.

Dept. | Unit | Rev. 0 | Version

Drawing No.: T10206-XW03-P0ECC00-628007

Page-No. 1/1

A0 (841 x 1189mm)

? ???? ??? ??? (?)??? ???? ??? ?? ???? ?? ????? ????. The information written in this drawing is HYOSUNG's property, and may not be disclosed and/or reproduced without the prior official permission of HYOSUNG Corp.

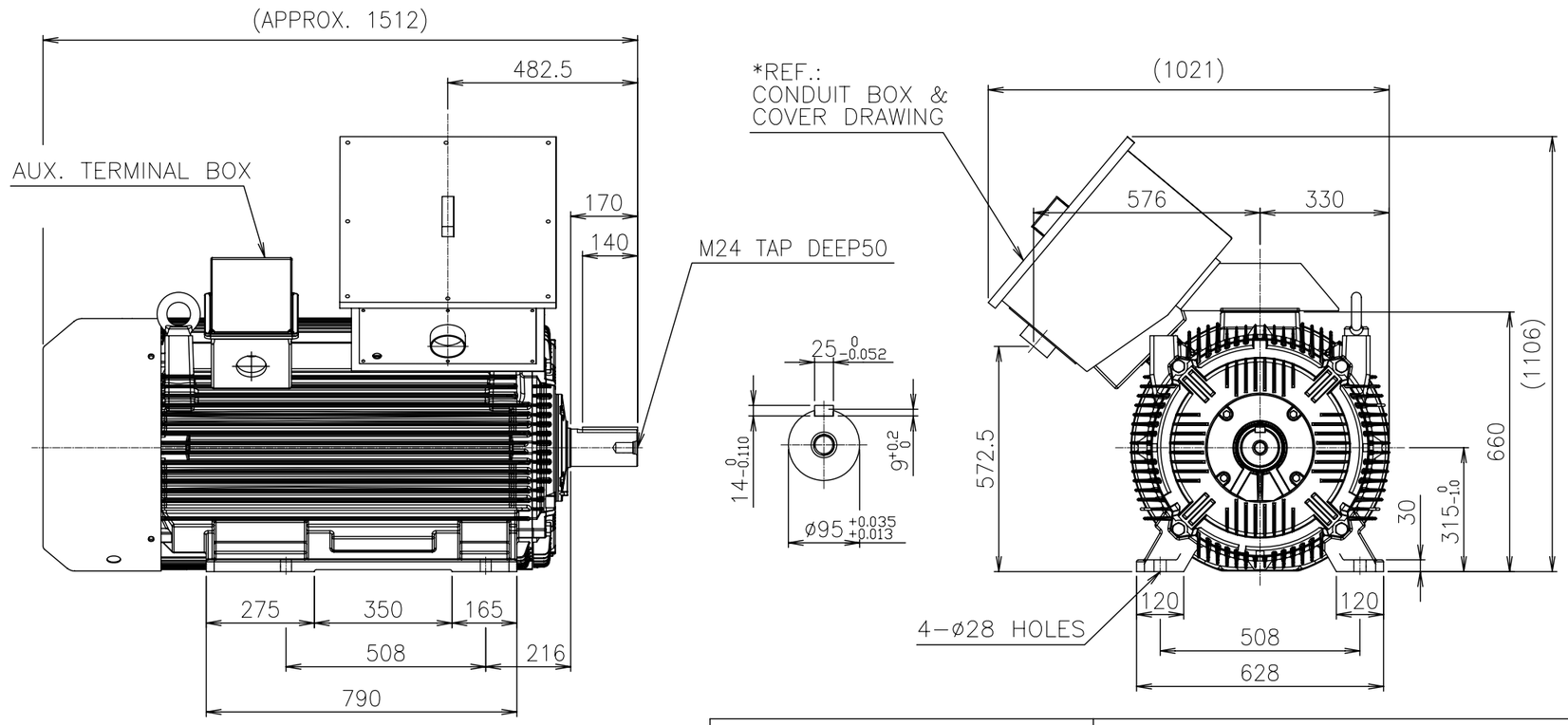

CONV.NO.	Q'TY
CV-03B	1

TYPE	AC MOTOR TE/EP FR.315L 6P~				DWG. NAME	OUTLINE DIMENSIONS			
DRAWN	DESIGN	CHECKED	REVIEWED	APPROVED		SCALE	1/15	DATE	2012-04-13
					REF. DWG. NO.			UNIT	mm
HYOSUNG					DWG. NO.	DMMK11785H07			0

양식CE-14-0100-3A4R

FOR CONSTRUCTION

THIS DRAWING IS THE PROPERTY OF DOOSAN HEAVY INDUSTRIES & CONSTRUCTION CO., LTD.
IT IS NOT TO BE COPIED OR USED IN ANY WAY DETRIMENTAL TO THE COMPANY.

Rev.	Date	Prepared	Checked	Approved	Details of Revision
0	05.02.2013	R.SIN	Y.I.MIN	J.S.PARK	FOR CONSTRUCTION

Owner: AES-VCM MONG DUONG POWER COMPANY LIMITED

Consultant: POWER ENGINEERING CONSULTING JOINT STOCK COMPANY 2

Contractor: Doosan Heavy Industries & Construction Co., Ltd.

Project: MONG DUONG II 2x560MW(NET) COAL FIRED POWER PROJECT

Orig-Pc: T10206
PC: XW03

	Date	Name
Drawn	05.10.2011	R.SIN
Checked	05.10.2011	Y.I.MIN
Approved	05.10.2011	J.S.PARK

Scale: NONE

Type: ECC

Title: COAL HANDLING SYSTEM CV-03B BELT CONVEYOR MOTOR OUTLINE DIMENSION

Contents Code: P0

Reg. No: 628008

Dept.: Doosan Heavy Industries & Construction Co., Ltd.

Rev.: 0 Version:

Drawing No.: T10206-XW03-P0ECC00-628008

Page-No.: 1/1

A0 (841 x 1189mm)

? ???? ??? ??? (?)??? ???? ??? ?? ???? ?? ????? ????. The information written in this drawing is HYOSUNG's property, and may not be disclosed and/or reproduced without the prior official permission of HYOSUNG Corp.

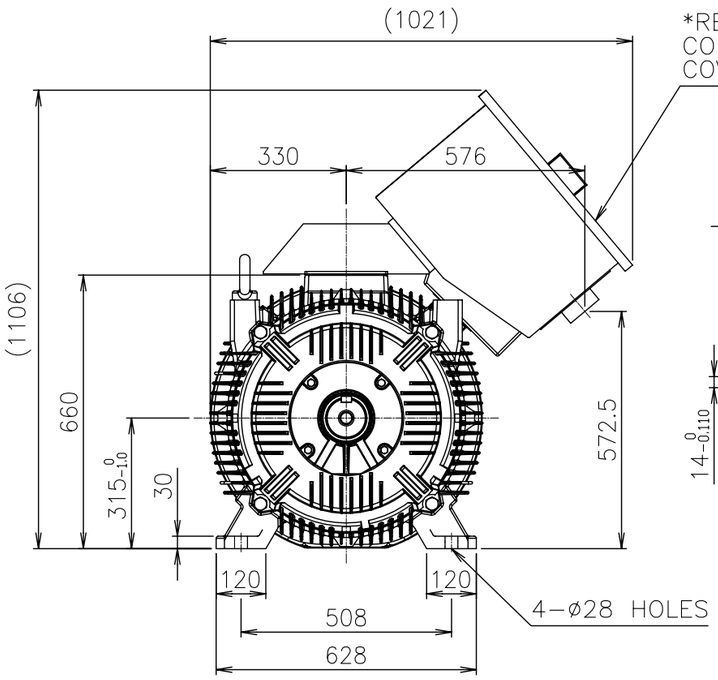

*REF.:
CONDUIT BOX &
COVER DRAWING

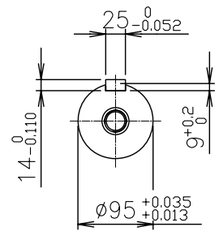

M20 TAP DEEP50

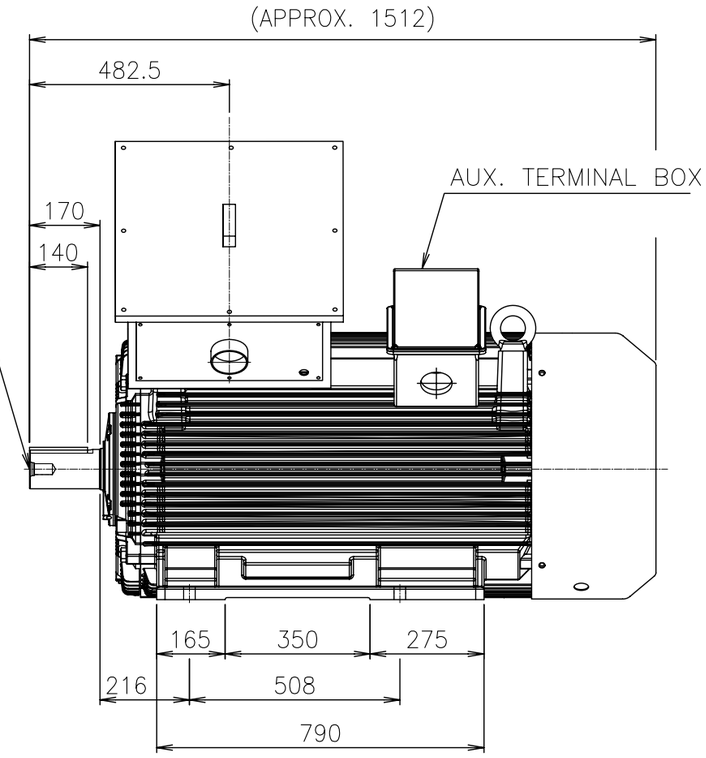

CONV.NO.	Q'TY
CV-04A/B	2

TYPE	DWG. NAME
AC MOTOR TE/EP FR.315L 6P~	OUTLINE DIMENSIONS

DRAWN	DESIGN	CHECKED	REVIEWED	APPROVED	SCALE	1/15	DATE	2012-04-13
					REF. DWG. NO.		UNIT	mm

HYOSUNG

DWG. NO. DMMK11785H10 (0)

양식CE-14-0100-3A4R

FOR CONSTRUCTION

THIS DRAWING IS THE PROPERTY OF DOOSAN HEAVY INDUSTRIES & CONSTRUCTION CO., LTD.
IT IS NOT TO BE COPIED OR USED IN ANY WAY DETRIMENTAL TO THE COMPANY.

Rev.	Date	Prepared	Checked	Approved	Details of Revision
0	05.02.2013	S.SIN	Y.I.MIN	J.S.PARK	FOR CONSTRUCTION

Owner: AES-VCM MONG DUONG POWER COMPANY LIMITED

Consultant: POWER ENGINEERING CONSULTING JOINT STOCK COMPANY 2

Contractor: Doosan Heavy Industries & Construction Co., Ltd.

Project: MONG DUONG II 2x560MW(NET) COAL FIRED POWER PROJECT

Orig-Pc: T10206
PC: XW03
Type: ECC
Contents Code: P0

	Date	Name
Drawn	05.10.2011	S.SIN
Checked	05.10.2011	Y.I.MIN
Approved	05.10.2011	J.S.PARK
Dept.		

Scale: NONE

Title: COAL HANDLING SYSTEM CV-04A/B BELT CONVEYOR MOTOR OUTLINE DIMENSION

Reg. No: 628010

Doosan Heavy Industries & Construction Co., Ltd.

Dept. | Unit | Rev. 0 | Version

Drawing No.: T10206-XW03-P0ECC00-628010

Page-No.: 1/1

A0 (841 x 1189mm)

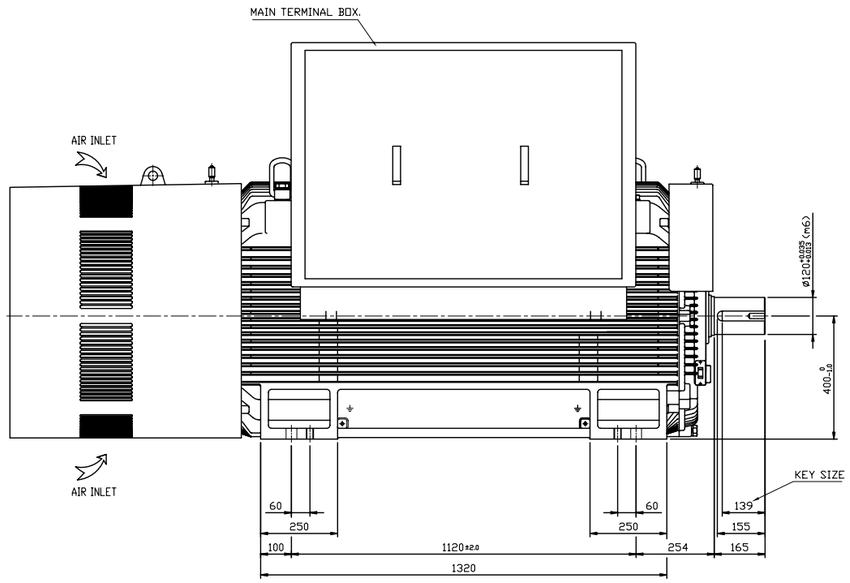

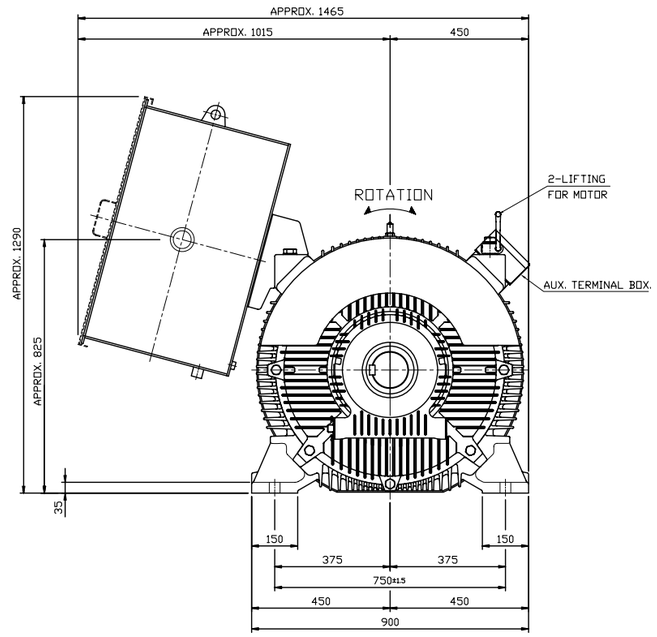

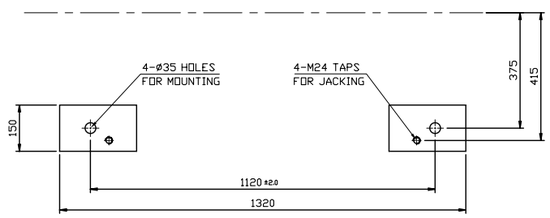

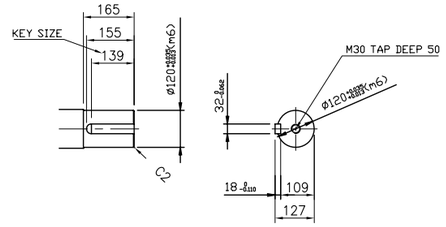

SHAFT END DETAIL

NOTE.

1. UNIT : mm
2. APPROX. WEIGHT : 3,850 Kg

CONV.NO.	Q'TY
CV-05A	1

TYPE: LF11 SERIES FR400, 6P

DWG. NAME: OUTLINE DIMENSIONS

DRAWN	DESIGN	CHECKED	REVIEWED	APPROVED	SCALE	N/S	DATE	2012-03-28
J.S KIM	J.S KIM	H.W PARK	W.B JEONG	S.S. AN	REF. DWG. NO.			UNIT mm

HYOSUNG

DWG. NO. DLMK12905 △0

REVISION

? ???? ??? ??? (?)??? ???? ??? ?? ???? ?? ????? ????. The information written in this drawing is HYOSUNG's property, and may not be disclosed and/or reproduced without the prior official permission of HYOSUNG Corp.

DWG. NO. DLMK12905 △0

ANCE-14-0100-3A2

FOR CONSTRUCTION

THIS DRAWING IS THE PROPERTY OF DOOSAN HEAVY INDUSTRIES & CONSTRUCTION CO., LTD.
IT IS NOT TO BE COPIED OR USED IN ANY WAY DETRIMENTAL TO THE COMPANY.

Rev.	Date	Prepared	Checked	Approved	Details of Revision
△0	05.02.2013	R.SIN	Y.I.MIN	J.S.PARK	FOR CONSTRUCTION

Owner: AES-VCM MONG DUONG POWER COMPANY LIMITED

Consultant: POWER ENGINEERING CONSULTING JOINT STOCK COMPANY 2

Contractor: Doosan Heavy Industries & Construction Co., Ltd.

Project: MONG DUONG II 2x560MW(NET) COAL FIRED POWER PROJECT

Orig-Pc: T10206
PC: XW03
Type: ECC
Contents Code: P0

	Date	Name
Drawn	05.10.2011	R.SIN
Checked	05.10.2011	Y.I.MIN
Approved	05.10.2011	J.S.PARK
Dept.		

Scale: NONE

Title: COAL HANDLING SYSTEM CV-05A BELT CONVEYOR MOTOR OUTLINE DIMENSION

Doosan Heavy Industries & Construction Co., Ltd.

Dept. | Unit

Reg. No: 628012
Rev.: 0
Version:

Drawing No.: T10206-XW03-P0ECC00-628012

Page-No.: 1/1

A0 (841 x 1189mm)

DWG. NO. DLMK12905

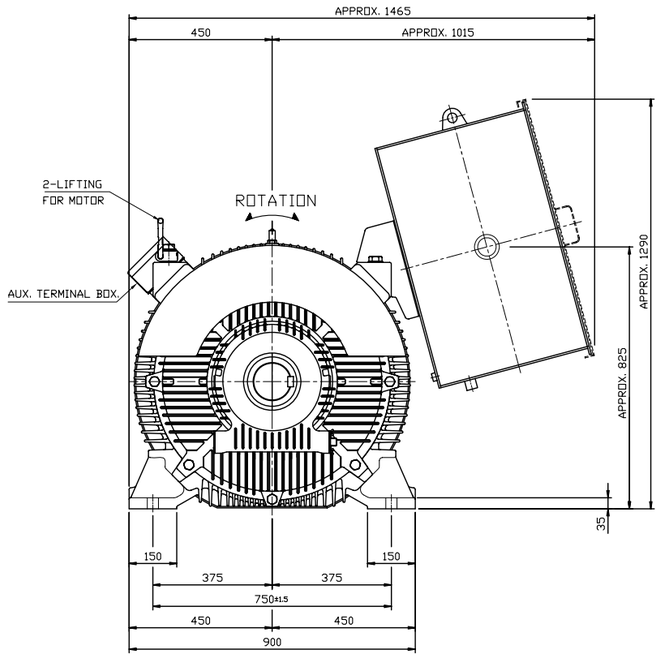

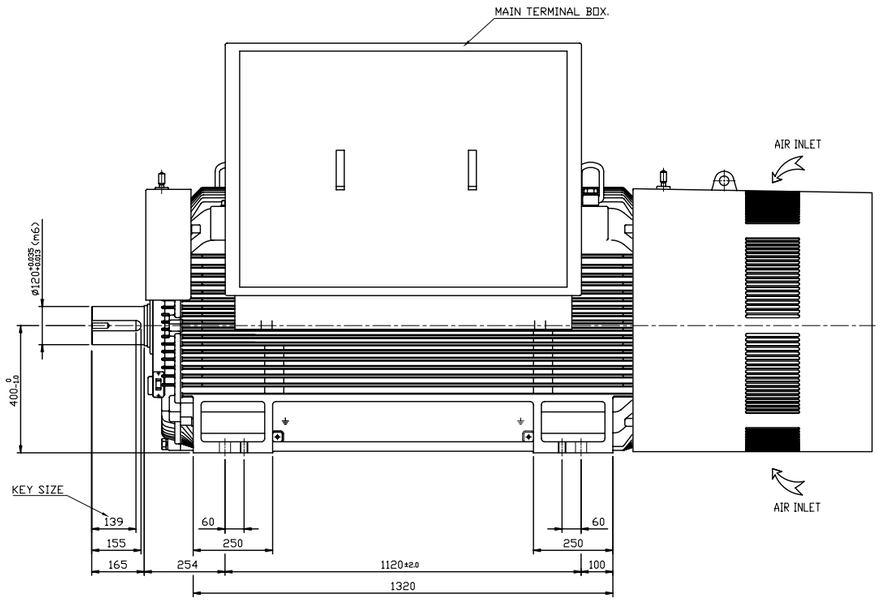

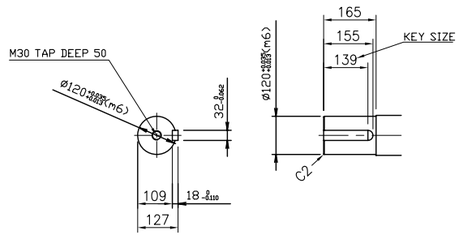

SHAFT END DETAIL

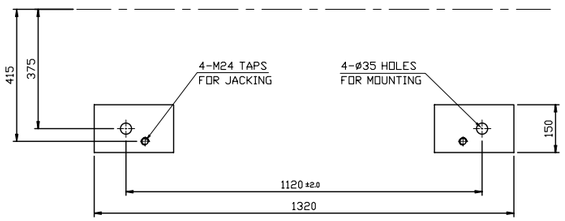

NOTE.

1. UNIT : mm
2. APPROX. WEIGHT : 3,850 Kg

CONV.NO.	Q'TY
CV-05B	1

REVISION

? ???? ??? ??? (?)???? ???? ??? ?? ???? ?? ????? ????. The information written in this drawing is HYOSUNG's property, and may not be disclosed and/or reproduced without the prior official permission of HYOSUNG Corp.

TYPE	DWG. NAME
LF11 SERIES FR400, 6P	OUTLINE DIMENSIONS

DRAWN	DESIGN	CHECKED	REVIEWED	APPROVED	SCALE	N/S	DATE	2012-03-28
J.S KIM	J.S KIM	H.W PARK	W.B JEONG	S.S. AN	REF. DWG. NO.			UNIT mm

HYOSUNG

DWG. NO. DLMK12905

양식CE-14-0100-3A2

FOR CONSTRUCTION

THIS DRAWING IS THE PROPERTY OF DOOSAN HEAVY INDUSTRIES & CONSTRUCTION CO., LTD. IT IS NOT TO BE COPIED OR USED IN ANY WAY DETRIMENTAL TO THE COMPANY.

Rev.	Date	Prepared	Checked	Approved	Details of Revision
A	05.02.2013	B.SIN	Y.I.MIN	J.S.PARK	FOR CONSTRUCTION

Owner: AES-VCM MONG DUONG POWER COMPANY LIMITED

Consultant: POWER ENGINEERING CONSULTING JOINT STOCK COMPANY 2

Contractor: Doosan Heavy Industries & Construction Co., Ltd.

Project: MONG DUONG II 2x560MW(NET) COAL FIRED POWER PROJECT

Orig-Pc: T10206
PC: XW03
Type: ECC

	Date	Name
Drawn	05.10.2011	B.SIN
Checked	05.10.2011	Y.I.MIN
Approved	05.10.2011	J.S.PARK
Dept.		

Scale: NONE

Title: COAL HANDLING SYSTEM CV-05B BELT CONVEYOR MOTOR OUTLINE DIMENSION

Contents Code: P0

Reg. No: 628013

Doosan Heavy Industries & Construction Co., Ltd.

Dept. | Unit

Rev.: 0 | Version

Drawing No.: T10206-XW03-P0ECC00-628013

Page-No.: 1/1

A0 (841 x 1189mm)

? ???? ??? ??? (?)??? ???? ??? ?? ???? ?? ????? ????. The information written in this drawing is HYOSUNG's property, and may not be disclosed and/or reproduced without the prior official permission of HYOSUNG Corp.

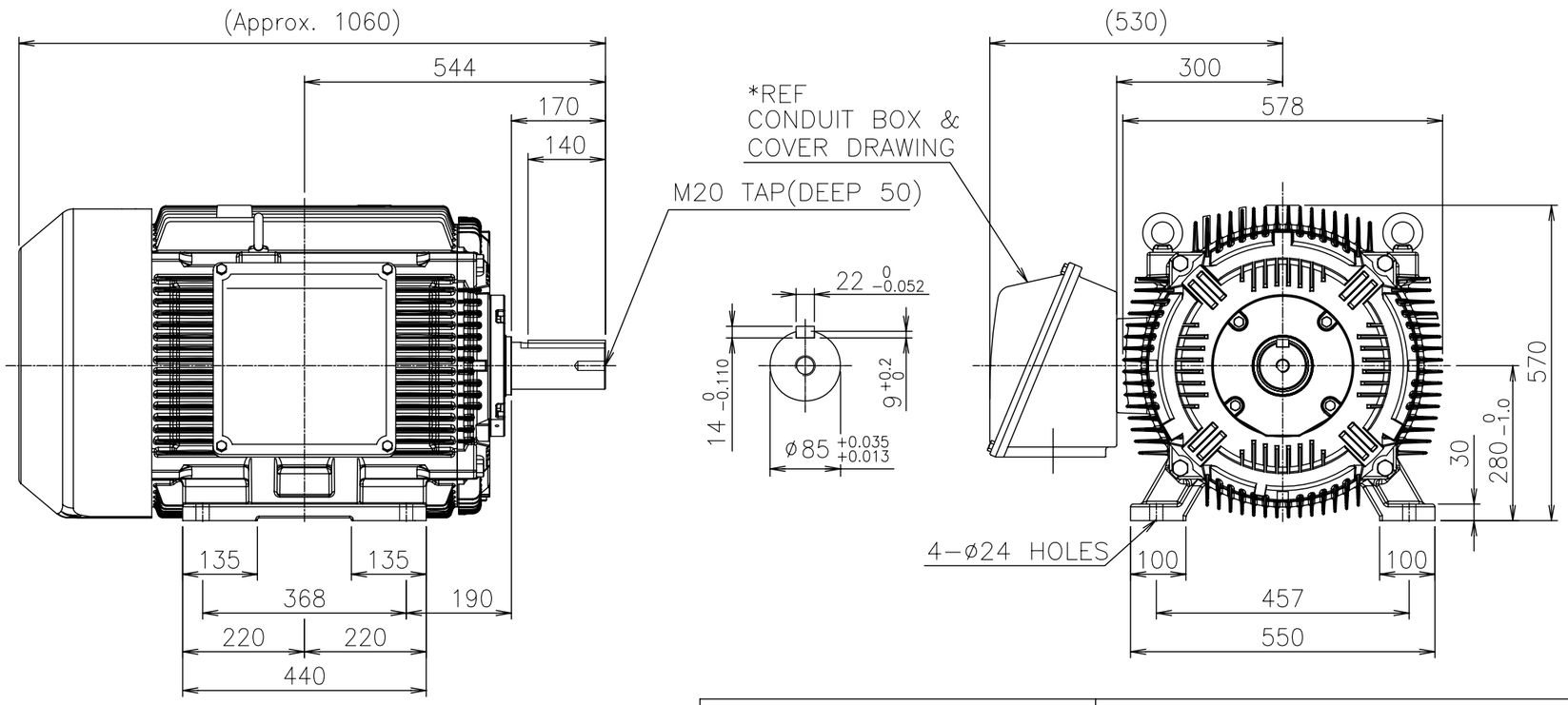

CONV.NO.	Q'TY
CV-06A	1

<NOTE>
1) THE CONDUIT BOX MAY BE ROTATED STEPS OF 90°.
2) STEEL HOOD & CAST IRON C/B.

TYPE	DWG. NAME
AC MOTOR TEFC FR.280S 4P~	OUTLINE DIMENSIONS

DRAWN	DESIGN	CHECKED	REVIEWED	APPROVED	SCALE	1/11	DATE	2012-04-13
					REF. DWG. NO.		UNIT	mm

HYOSUNG

DWG. NO. DMMK11785H05 ⚠0

양식CE-14-0100-3A4R

FOR CONSTRUCTION

THIS DRAWING IS THE PROPERTY OF DOOSAN HEAVY INDUSTRIES & CONSTRUCTION CO., LTD. IT IS NOT TO BE COPIED OR USED IN ANY WAY DETRIMENTAL TO THE COMPANY.

Rev.	Date	Prepared	Checked	Approved	Details of Revision
⚠	05.02.2013	ILSIN	Y.I.MIN	J.S.PARK	FOR CONSTRUCTION

Owner: AES-VCM MONG DUONG POWER COMPANY LIMITED

Consultant: POWER ENGINEERING CONSULTING JOINT STOCK COMPANY 2

Contractor: Doosan Heavy Industries & Construction Co., Ltd.

Project: MONG DUONG II 2x560MW(NET) COAL FIRED POWER PROJECT

Orig-Pc: T10206
PC: XW03
Type: ECC
Contents Code: P0

	Date	Name
Drawn	05.10.2011	ILSIN
Checked	05.10.2011	Y.I.MIN
Approved	05.10.2011	J.S.PARK
Dept.		

Scale: NONE

Title: COAL HANDLING SYSTEM CV-06A BELT CONVEYOR MOTOR OUTLINE DIMENSION

Reg. No: 628015
Rev.: 0
Version:

Doosan Heavy Industries & Construction Co., Ltd. | Dept. | Unit

Drawing No.: T10206-XW03-P0ECC00-628015

Page-No.: 1/1

A0 (841 x 1189mm)

? ???? ??? ??? (?)??? ???? ??? ?? ???? ?? ????? ????. The information written in this drawing is HYOSUNG's property, and may not be disclosed and/or reproduced without the prior official permission of HYOSUNG Corp.

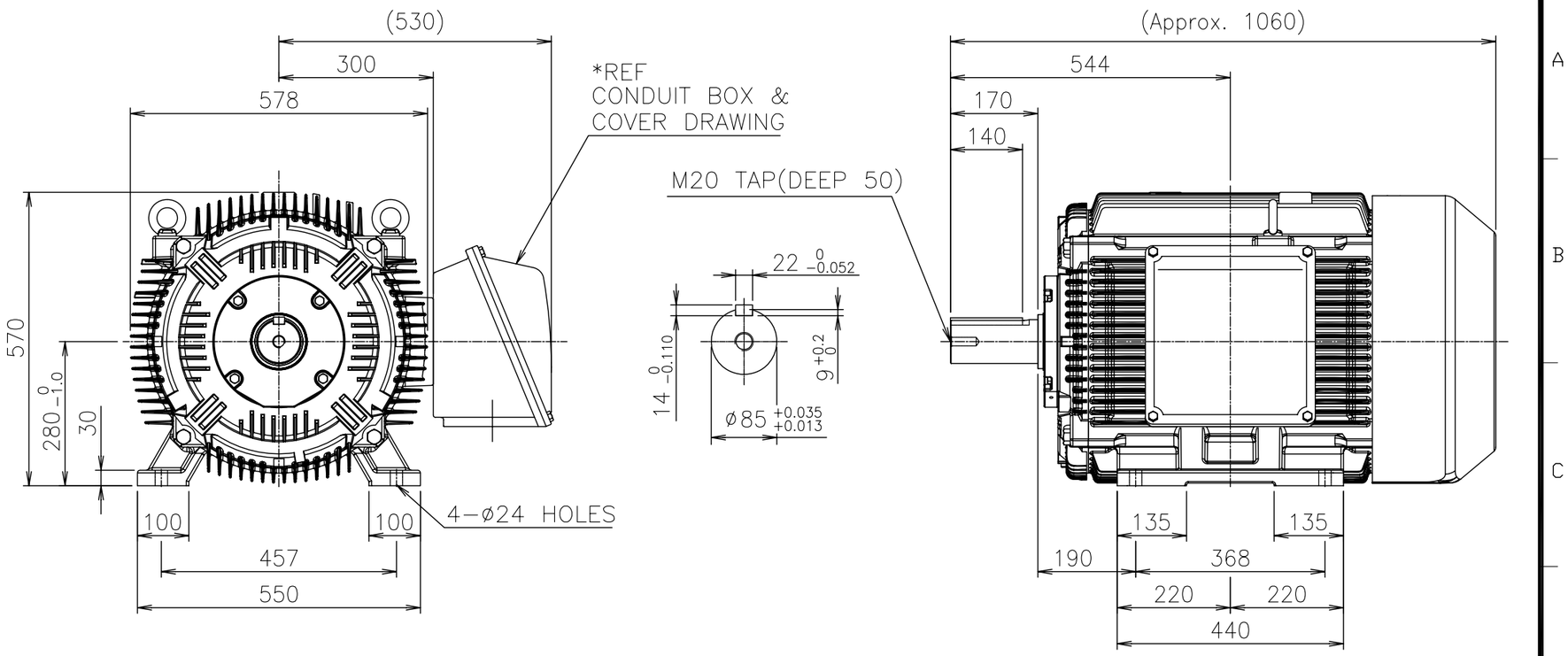

CONV.NO.	Q'TY
CV-06B	1

<NOTE>
1) THE CONDUIT BOX MAY BE ROTATED STEPS OF 90°.
2) STEEL HOOD & CAST IRON C/B.

TYPE	DWG. NAME
AC MOTOR TEFC FR.280S 4P~	OUTLINE DIMENSIONS

DRAWN	DESIGN	CHECKED	REVIEWED	APPROVED	SCALE	1/11	DATE	2012-04-13
					REF. DWG. NO.		UNIT	mm

HYOSUNG

DWG. NO. DMMK11785H06 (0)

양식CE-14-0100-3A4R

FOR CONSTRUCTION

THIS DRAWING IS THE PROPERTY OF DOOSAN HEAVY INDUSTRIES & CONSTRUCTION CO., LTD. IT IS NOT TO BE COPIED OR USED IN ANY WAY DETRIMENTAL TO THE COMPANY.

Rev.	Date	Prepared	Checked	Approved	Details of Revision
0	05.02.2013	IL.SIN	Y.I.MIN	J.S.PARK	FOR CONSTRUCTION

Owner: AES-VCM MONG DUONG POWER COMPANY LIMITED

Consultant: POWER ENGINEERING CONSULTING JOINT STOCK COMPANY 2

Contractor: Doosan Heavy Industries & Construction Co., Ltd.

Project: MONG DUONG II 2x560MW(NET) COAL FIRED POWER PROJECT

Orig-Pc: T10206
PC: XW03
Type: ECC
Contents Code: P0

	Date	Name
Drawn	05.10.2011	IL.SIN
Checked	05.10.2011	Y.I.MIN
Approved	05.10.2011	J.S.PARK
Dept.		

Scale: NONE

Title: COAL HANDLING SYSTEM CV-06B BELT CONVEYOR MOTOR OUTLINE DIMENSION

Doosan Heavy Industries & Construction Co., Ltd. | Dept. | Unit

Reg. No: 628016
Rev.: 0
Version:
Drawing No.: T10206-XW03-P0ECC00-628016
Page-No.: 1/1

A0 (841 x 1189mm)

2. CONVEYOR REDUCER

A0 (841 x 1189mm)

DRAWING LIST

NO	DWG. NO	DWG. TITLE	REVISION						REMARK	NO	DWG. NO	DWG. TITLE	REVISION						REMARK
			0	1	2	3	4	5					0	1	2	3	4	5	
1	T10206-XW03-P0ECC00-628051	COAL HANDLING SYSTEM CV-01A/B BELT CONVEYOR REDUCER OUTLINE DIMENSION	2013-02-05																
2	T10206-XW03-P0ECC00-628052	COAL HANDLING SYSTEM CV-02A/B BELT CONVEYOR REDUCER OUTLINE DIMENSION	2013-02-05																
3	T10206-XW03-P0ECC00-628053	COAL HANDLING SYSTEM CV-03A/B BELT CONVEYOR REDUCER OUTLINE DIMENSION	2013-02-05																
4	T10206-XW03-P0ECC00-628054	COAL HANDLING SYSTEM CV-04A/B BELT CONVEYOR REDUCER OUTLINE DIMENSION	2013-02-05																
5	T10206-XW03-P0ECC00-628055	COAL HANDLING SYSTEM CV-05A/B BELT CONVEYOR REDUCER OUTLINE DIMENSION	2013-02-05																
6	T10206-XW03-P0ECC00-628056	COAL HANDLING SYSTEM CV-06A/B BELT CONVEYOR REDUCER OUTLINE DIMENSION	2013-02-05																
7	T10206-XW03-P0ECC00-628057	COAL HANDLING SYSTEM CF-01A/B BELT CONVEYOR REDUCER OUTLINE DIMENSION	2013-02-05																

DKBD15183

NOTE

1, MOTOR POWER	:	110kW
2, INPUT RPM	:	1500 RPM
3, OUTPUT RPM	:	88.235 RPM
4, TOTAL RATIO	:	17:1 (ACTUAL : 16.91:1)
5, OIL CAPACITY	:	ISO VG #220 (APPROX. 45 LITERS)
6, TOTAL WEIGHT	:	1,300 KG (APPROX.)

SPECIFICATION OF GEAR

STAGE	1st STAGE		2nd STAGE	
DESCRIPTION	PINION	GEAR	PINION	GEAR
GEAR TYPE	BEVEL GEAR		HELICAL GEAR	
MODULE(Mn)	5.72		6	
PRESSURE ANGLE	20°		20°	
NUMBER OF TEETH	13	46	18	86
HAND & HELIX ANGLE	RH 37.068° LH		LH 9.9° RH	
PITCH CIRCLE DIA.	113.043	400.000	109.633	523.800
FACE WIDTH	73		112	110
MATERIAL	SCM415			
HEAT TREATMENT	CARBURIZED			
HARDNESS	HRc 58+4			
GRADE	JIS 4 CLASS		JIS 2 CLASS△	

△△	CONV NO.	CV01A/B	2SETS

ITEM NO	NAME	MATERIAL	DWG. NO. MATERIAL CODE	Q'TY	SIZE	REMARKS
1	CASING	SS400		1		
2	INPUT BEVEL PINION	SCM415		1		
3	BEVEL GEAR	SCM415		1		
4	2'ND PINION	SCM415		1		
5	2'ND GEAR	SCM415		1		
6	OUTPUT SHAFT	SM45C		1		
7	BEARING			2	#30318	
8	BEARING			1	#22318	
9	BEARING			2	#32318	
10	BEARING			2	#23030	
11	OIL SEAL	NBR		2	80x105x13	
12	OIL SEAL	NBR		1	150x180x14	

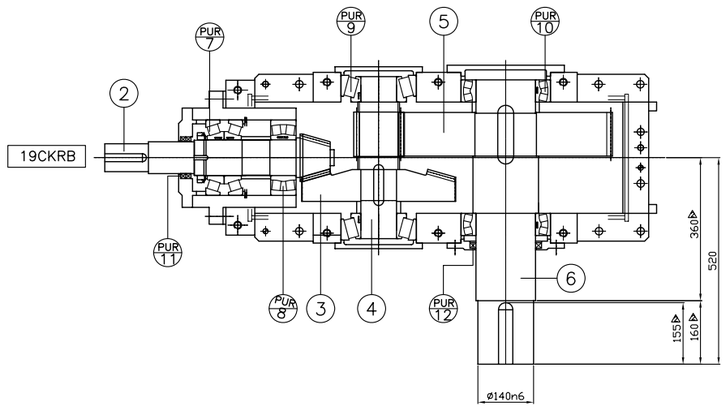

SSM315

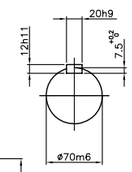

INPUT SHAFT

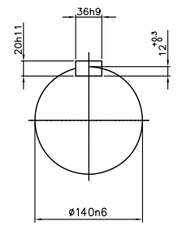

OUTPUT SHAFT

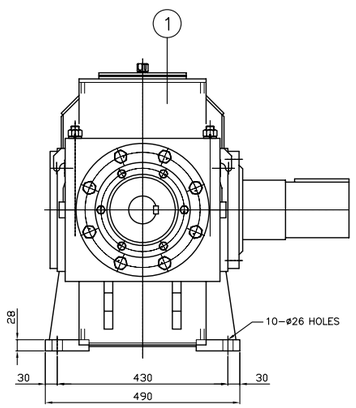

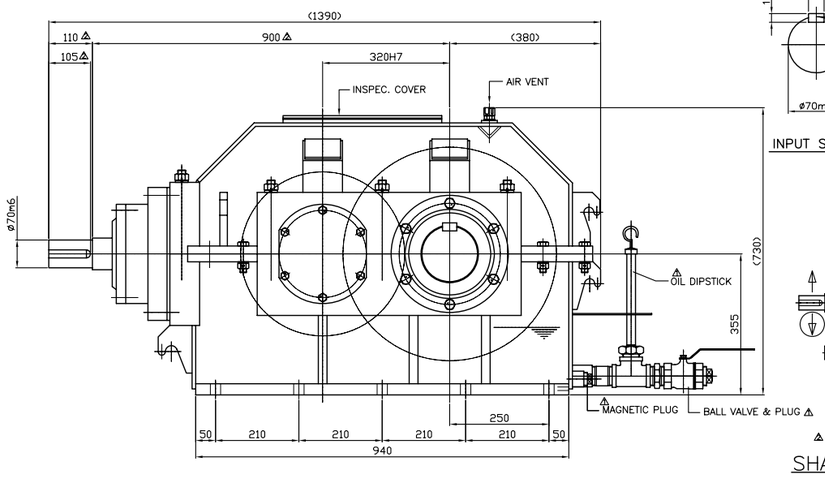

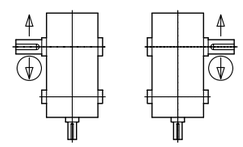

SHAFT ARRANGEMENT & DIRECTION of ROTATION

REV	DESCRIPTION	APPR	CHCK	DRWN	DATE
△	수용가 요청으로 도면수정	K.K.D	K.S.W	Y.J.W	12.02.27
△	수용가 요청으로 도면수정	K.K.D	K.S.W	Y.J.W	12.04.18
△					
△					

Y YYYY YYY YYY (YY)YYY YYYY YYY YY YYYY YY YYYYYY YYYY. The information written in this drawing is HYOSUNG's property, and may not be disclosed and/or reproduced without the prior official permission of HYOSUNG Corp.

TYPE	DWG. NAME
SKB32	DIMENSION DIM & ASSY

DRAWN	DESIGN	CHECKED	REVIEWED	APPROVED	SCALE	1/5.5	DATE	2011-12-28
Y. J.W. 2011.12.28	K. S.W. 2011.12.28			K. K.D 2011.12.28	REF. DWG. NO.			UNIT mm

HYOSUNG — DWG. NO. DKBD15183 △

양식CE-14-0100-3A1

FOR CONSTRUCTION

THIS DRAWING IS THE PROPERTY OF DOOSAN HEAVY INDUSTRIES & CONSTRUCTION CO., LTD.
IT IS NOT TO BE COPIED OR USED IN ANY WAY DETRIMENTAL TO THE COMPANY.

Rev.	Date	Prepared	Checked	Approved	Details of Revision
△					
△					
△					
△					
△	05.02.2013	K.SIN	Y.I.MIN	J.S.PARK	FOR CONSTRUCTION

Owner: AES-VCM MONG DUONG POWER COMPANY LIMITED

Consultant: POWER ENGINEERING CONSULTING JOINT STOCK COMPANY 2

Contractor: Doosan Heavy Industries & Construction Co., Ltd.

Project: MONG DUONG II 2x560MW(NET) COAL FIRED POWER PROJECT

Orig-Pk: T10206 — PC: XW03 — Type: ECC

	Date	Name
Drawn	05.10.2011	K.SIN
Checked	05.10.2011	Y.I.MIN
Approved	05.10.2011	J.S.PARK
Dept.		

Scale: NONE

Title: COAL HANDLING SYSTEM CV-01A/B BELT CONVEYOR REDUCER OUTLINE DIMENSION

Contents Code: P0

Doosan Heavy Industries & Construction Co., Ltd. — Dept. — Unit

Rev. 0 — Version

Drawing No. T10206-XW03-P0ECC00-628051

Reg. No. 628051

Page-No. 1/1

A0 (841 x 1189mm)

DKBD15183

NOTE

1, MOTOR POWER	:	110kW
2, INPUT RPM	:	1500 RPM
3, OUTPUT RPM	:	88.235 RPM
4, TOTAL RATIO	:	17:1 (ACTUAL : 16.91:1)
5, OIL CAPACITY	:	ISO VG #220 (APPROX. 45 LITERS)
6, TOTAL WEIGHT	:	1,300 KG (APPROX.)

SPECIFICATION OF GEAR

STAGE	1st STAGE		2nd STAGE	
DESCRIPTION	PINION	GEAR	PINION	GEAR
GEAR TYPE	BEVEL GEAR		HELICAL GEAR	
MODULE(Mn)	5.72		6	
PRESSURE ANGLE	20°		20°	
NUMBER OF TEETH	13	46	18	86
HAND & HELIX ANGLE	RH 37.068° LH		LH 9.9° RH	
PITCH CIRCLE DIA.	113.043	400.000	109.633	523.800
FACE WIDTH	73		112	110
MATERIAL	SCM415			
HEAT TREATMENT	CARBURIZED			
HARDNESS	HRc 58+4			
GRADE	JIS 4 CLASS		JIS 2 CLASS	

CONV NO.	CV02A/B	2SETS

E. NO	NAME	MATERIAL	DWG. NO. MATERIAL CODE	Q'TY	SIZE	REMARKS
1	CASING	SS400		1		
2	INPUT BEVEL PINION	SCM415		1		
3	BEVEL GEAR	SCM415		1		
4	2'ND PINION	SCM415		1		
5	2'ND GEAR	SCM415		1		
6	OUTPUT SHAFT	SM45C		1		
7	BEARING			2	#30318	
8	BEARING			1	#22318	
9	BEARING			2	#32318	
10	BEARING			2	#23030	
11	OIL SEAL	NBR		2	80x105x13	
12	OIL SEAL	NBR		1	150x180x14	

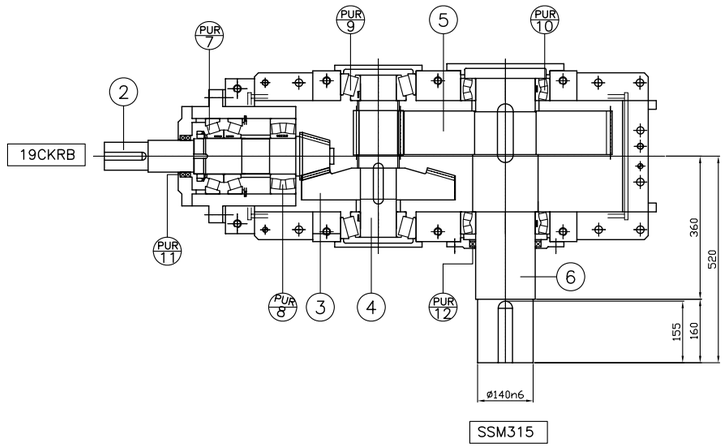

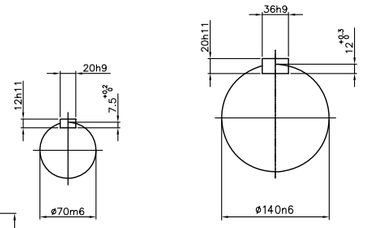

INPUT SHAFT

OUTPUT SHAFT

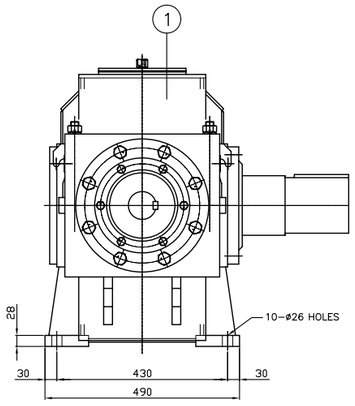

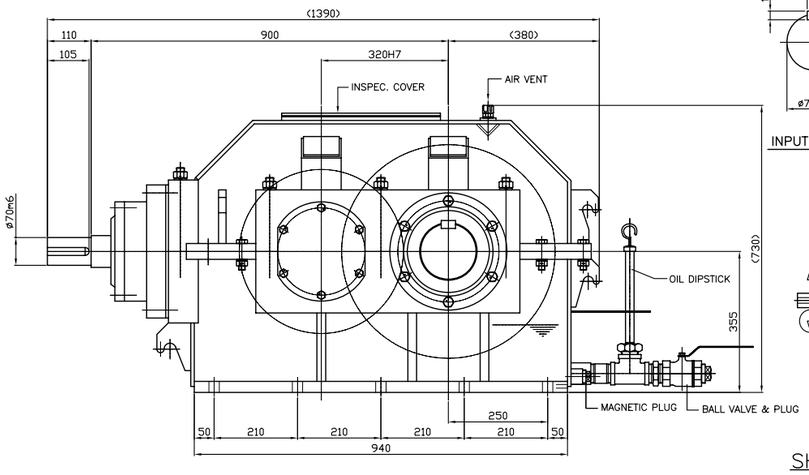

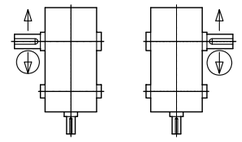

CL
CV-02B

CR
CV-02A

SHAFT ARRANGEMENT & DIRECTION of ROTATION

REV	DESCRIPTION	APPR	CHCK	DRWN	DATE
△					
△					
△					
△					

1 ????? ??? ??? ??(???? ???? ??? ?? ???? ?? ????? ????). The information written in this drawing is HYOSUNG's property, and may not be disclosed and/or reproduced without the prior official permission of HYOSUNG Corp.

TYPE	DWG. NAME
SKB32	DIMENSION DIM & ASSY

DRAWN	DESIGN	CHECKED	REVIEWED	APPROVED	SCALE	1/5.5	DATE	2012-04-10
	Y. J.W.	K. S.W.		K. K.D.	REF. DWG. NO.			UNIT mm

HYOSUNG

DWG. NO. DKBD15183H01 △1

양식CE-14-0100-3A1

FOR CONSTRUCTION

THIS DRAWING IS THE PROPERTY OF DOOSAN HEAVY INDUSTRIES & CONSTRUCTION CO., LTD.
IT IS NOT TO BE COPIED OR USED IN ANY WAY DETRIMENTAL TO THE COMPANY.

Rev.	Date	Prepared	Checked	Approved	Details of Revision
△					
△					
△					
△					
△1	05.02.2013	S.SIN	Y.J.MIN	J.S.PARK	FOR CONSTRUCTION

Owner: AES-VCM MONG DUONG POWER COMPANY LIMITED

Consultant: POWER ENGINEERING CONSULTING JOINT STOCK COMPANY 2

Contractor: Doosan Heavy Industries & Construction Co., Ltd.

Project: MONG DUONG II 2x560MW(NET) COAL FIRED POWER PROJECT

Job-No. T10206
PC XW03
Type ECC

	Date	Name
Drawn	05.10.2011	S.SIN
Checked	05.10.2011	Y.J.MIN
Approved	05.10.2011	J.S.PARK
Dept.		

Scale NONE

Title: COAL HANDLING SYSTEM CV-02A/B BELT CONVEYOR REDUCER OUTLINE DIMENSION

Contents Code P0

Reg. No 628052

Rev. 0 Version

Doosan Heavy Industries & Construction Co., Ltd.

Dept. Unit

Drawing No. T10206-XW03-P0ECC00-628052

Page-No. 1/1

A0 (841 x 1189mm)

DWG. NO. DKBD15180

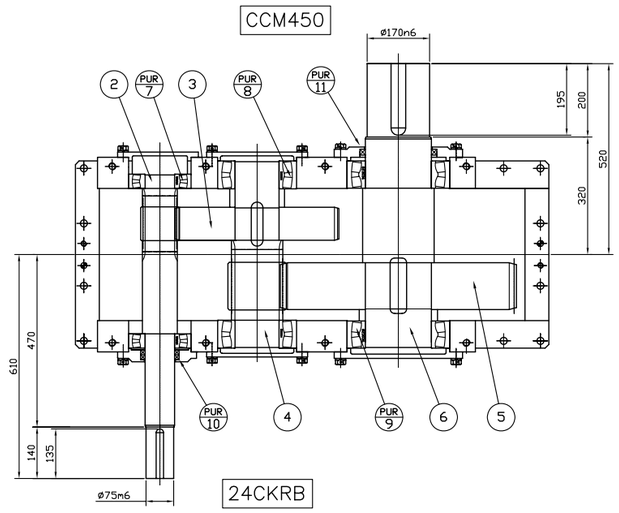

NOTE

1, MOTOR POWER	:	150 KW
2, INPUT RPM	:	1000 RPM△
3, OUTPUT RPM	:	45.45 RPM△
4, TOTAL RATIO	:	22:1 (ACTUAL ; 21.64:1)
5, OIL CAPACITY	:	ISO VG #220 (APPROX. 80 LITTERS)
6, TOTAL WEIGHT	:	1850 KG (APPROX.)

IT. NO.	NAME	MATERIAL	DWG.NO. MATERIAL CODE	Q'TY	SIZE	REMARKS
1	CASING	SS400		1		
2	INPUT PINION	SCM415		1		
3	1'ST GEAR	SCM415		1		
4	2'ND PINION	SCM415		1		
5	2'ND GEAR	SCM415		1		
6	OUTPUT SHAFT	SM45C		1		
7	BEARING			2	#21316	
8	BEARING			2	#23224	
9	BEARING			2	#23036	
10	OIL SEAL	NBR		2	80x105x13	
11	OIL SEAL	NBR		1	180x210x16	

CONV NO.	CV03A/B	2SETS

SPECIFICATION OF GEAR

STAGE	1st STAGE		2nd STAGE	
DESCRIPTION	PINION	GEAR	PINION	GEAR
GEAR TYPE	HELICAL GEAR		HELICAL GEAR	
MODULE(Mn)	5		8	
PRESSURE ANGLE	20°		20°	
NUMBER OF TEETH	18	86	17	77
HAND & HELIX ANGLE	RH 10.1° LH		LH 11.4° RH	
PITCH .C.D	91.417	436.769	138.737	628.398
FACE WIDTH	92	90	130	128
MATERIAL	SCM415			
HEAT TREATMENT	CARBURIZED			
HARDNESS	HRc 58+4			
GRADE	JIS 2 GLASS			

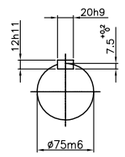

INPUT SHAFT

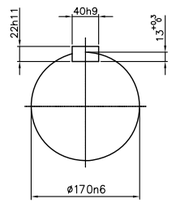

OUTPUT SHAFT

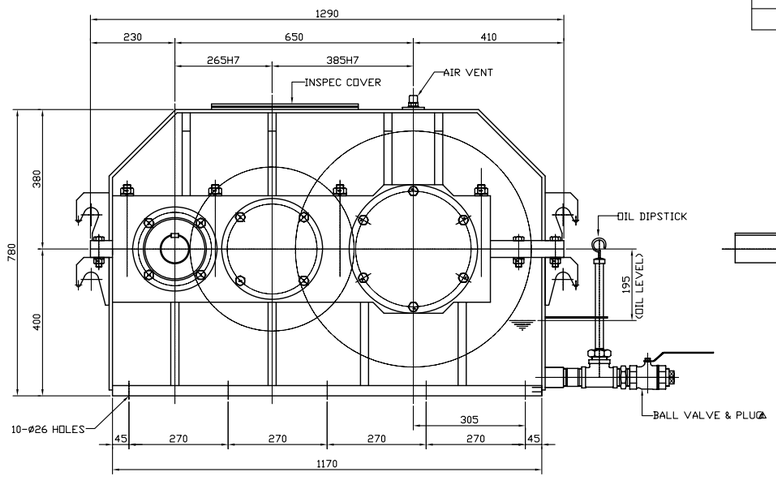

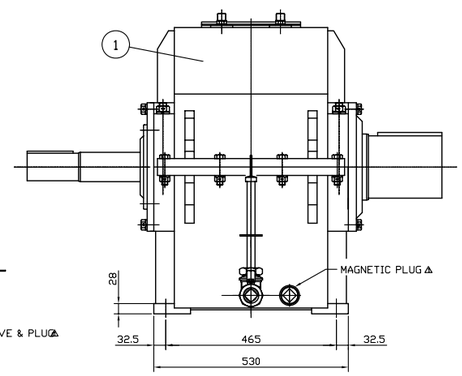

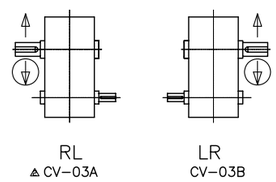

SHAFT ARRANGEMENT & DIRECTION of ROTATION

REV	DESCRIPTION	APPR	CHCK	DRWN	DATE
△	수용가 요청으로 도면수정	K.K.D	K.S.W	Y.J.W	12.02.07
△	수용가 요청으로 형식 변경(SHB32-->SHB38)	K.K.D	K.S.W	Y.J.W	11.04.18
△					
△					

ⓒ ???? ??? ??? (?)??? ???? ??? ?? ???? ?? ????? ????. The information written in this drawing is HYOSUNG's property, and may not be disclosed and/or reproduced without the prior official permission of HYOSUNG Corp.

TYPE △	DWG. NAME	DIMENSION DIM & ASSY
SHB38		

DRAWN	DESIGN	CHECKED	REVIEWED	APPROVED	SCALE	1/6	DATE	2011-12-28
Y 2011.12.28 J.W	K 2011.12.28 S.W			K 2011.12.28 K.D	REF. DWG. NO.			UNIT mm

HYOSUNG — DWG. NO. DKBD15180 △

양식CE-14-0100-3A1

FOR CONSTRUCTION

THIS DRAWING IS THE PROPERTY OF DOOSAN HEAVY INDUSTRIES & CONSTRUCTION CO., LTD. IT IS NOT TO BE COPIED OR USED IN ANY WAY DETRIMENTAL TO THE COMPANY.

Rev.	Date	Prepared	Checked	Approved	Details of Revision
△					
△					
△					
△					
△	05.02.2013	B.SIN	Y.J.MIN	J.S.PARK	FOR CONSTRUCTION

Owner: AES-VCM MONG DUONG POWER COMPANY LIMITED

Consultant: POWER ENGINEERING CONSULTING JOINT STOCK COMPANY 2

Contractor: Doosan Heavy Industries & Construction Co., Ltd.

Project: MONG DUONG II 2x560MW(NET) COAL FIRED POWER PROJECT

Orig-Pr: T10206 | PC: XW03 | Type: ECC | Contents Code: P0

	Date	Name
Drawn	05.10.2011	B.SIN
Checked	05.10.2011	Y.J.MIN
Approved	05.10.2011	J.S.PARK
Dept.		

Scale: NONE

Title: COAL HANDLING SYSTEM CV-03A/B BELT CONVEYOR REDUCER OUTLINE DIMENSION

Doosan Heavy Industries & Construction Co., Ltd. | Dept. | Unit

Reg. No: 628053 | Rev.: 0 | Version

Drawing No.: T10206-XW03-P0ECC00-628053 | Page-No.: 1/1

A0 (841 x 1189mm)

DWG. NO. DKBD15182

NOTE

1, MOTOR POWER : 132kW
2, INPUT RPM : 1000 RPM△
3, OUTPUT RPM : 66.67 RPM△
4, TOTAL RATIO : 15:1 (ACTUAL : 14.86:1)
5, OIL CAPACITY : ISO VG #220 (APPROX. 45 LITERS)
6, TOTAL WEIGHT : 1,300 KG (APPROX.)

SPECIFICATION OF GEAR

STAGE	1st STAGE		2nd STAGE	
DESCRIPTION	PINION	GEAR	PINION	GEAR
GEAR TYPE	BEVEL GEAR		HELICAL GEAR	
MODULE(Mn)	5.72		6	
PRESSURE ANGLE	20°		20°	
NUMBER OF TEETH	13	46	20	84
HAND & HELIX ANGLE	RH 37.068° LH		LH 9.9° RH	
PITCH CIRCLE DIA.	113.043	400.000	121.814	511.618
FACE WIDTH	73		112	110
MATERIAL	SCM415			
HEAT TREATMENT	CARBURIZED			
HARDNESS	HRc 58+4			
GRADE	JIS 4 CLASS		JIS 2 CLASS △	

△△	CONV NO.	CV04A/B	2SETS

E. NO	NAME	MATERIAL	DWG. NO. MATERIAL CODE	Q'TY	SIZE	REMARKS
1	CASING	SS400		1		
2	INPUT BEVEL PINION	SCM415		1		
3	BEVEL GEAR	SCM415		1		
4	2'ND PINION	SCM415		1		
5	2'ND GEAR	SCM415		1		
6	OUTPUT SHAFT	SM45C		1		
7	BEARING			2	#30318	
8	BEARING			1	#22318	
9	BEARING			2	#32318	
10	BEARING			2	#23030	
11	OIL SEAL	NBR		2	80x105x13	
12	OIL SEAL	NBR		1	150x180x14	

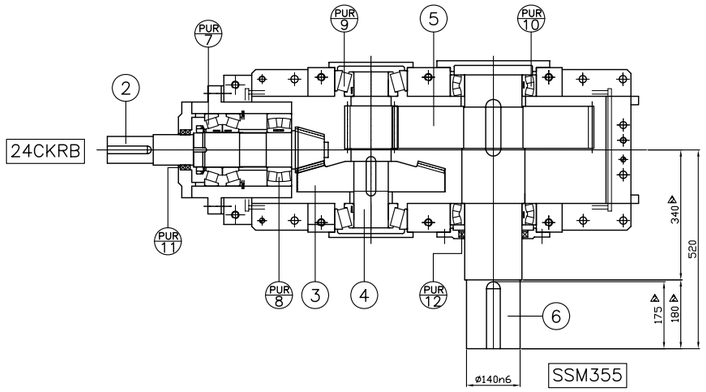

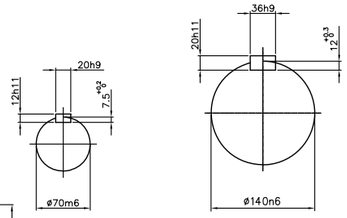

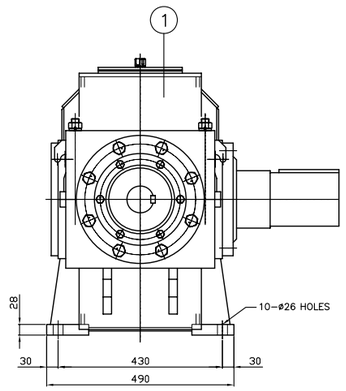

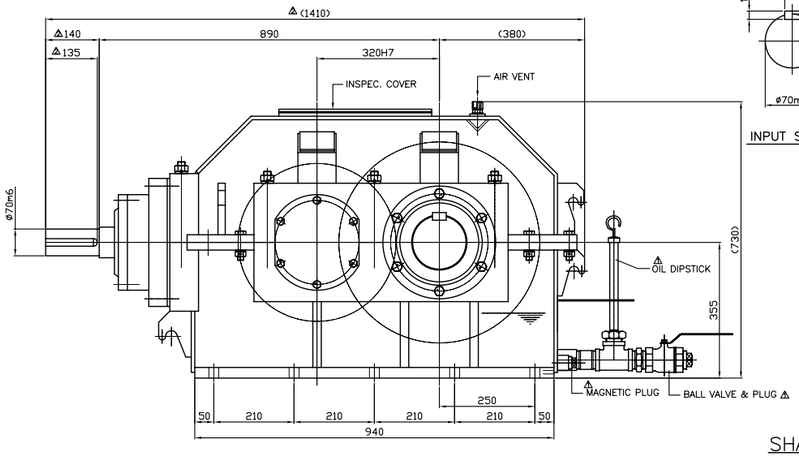

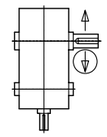

CR
△CV-04A/B
SHAFT ARRANGEMENT & DIRECTION of ROTATION

REV	DESCRIPTION	APPR	CHCK	DRWN	DATE
△	수용가 요청으로 도면수정	K.K.D	K.S.W	Y.J.W	13.01.17
△	수용가 요청으로 도면수정	K.K.D	K.S.W	Y.J.W	13.04.18
△					
△					

* ????? ??? ??? ?????? ???? ??? ?? ???? ?? ????? ???. The information written in this drawing is HYOSUNG's property, and may not be disclosed and/or reproduced without the prior official permission of HYOSUNG Corp.

TYPE	DWG. NAME
SKB32	DIMENSION DIM & ASSY

DRAWN	DESIGN	CHECKED	REVIEWED	APPROVED	SCALE	1/5.5	DATE	2011-12-28
Y.J.W 2011.12.28	K.S.W 2011.12.28			K.K.D 2011.12.28	REF. DWG. NO.			UNIT mm

HYOSUNG — DWG. NO. DKBD15182 △2

양식CE-14-0100-3A1

FOR CONSTRUCTION

THIS DRAWING IS THE PROPERTY OF DOOSAN HEAVY INDUSTRIES & CONSTRUCTION CO., LTD.
IT IS NOT TO BE COPIED OR USED IN ANY WAY DETRIMENTAL TO THE COMPANY.

Rev.	Date	Prepared	Checked	Approved	Details of Revision
△					
△					
△					
△					
△	05.02.2013	S.SIN	Y.I.MIN	J.S.PARK	FOR CONSTRUCTION

Owner: AES-VCM MONG DUONG POWER COMPANY LIMITED

Consultant: POWER ENGINEERING CONSULTING JOINT STOCK COMPANY 2

Contractor: Doosan Heavy Industries & Construction Co., Ltd.

Project: MONG DUONG II 2x560MW(NET) COAL FIRED POWER PROJECT

Orig-Pc: T10206
PC: XW03

	Date	Name	Scale: NONE
Drawn	05.10.2011	S.SIN	
Checked	05.10.2011	Y.I.MIN	
Approved	05.10.2011	J.S.PARK	
Dept.			

Title: COAL HANDLING SYSTEM CV-04A/B BELT CONVEYOR REDUCER OUTLINE DIMENSION

Type: ECC
Contents Code: P0
Reg. No: 628054

Doosan Heavy Industries & Construction Co., Ltd. — Dept. — Unit
Rev: 0 — Version

Drawing No.: T10206-XW03-P0ECC00-628054

Page-No.: 1/1

A0 (841 x 1189mm)

DKBD15181

NOTE

1. MOTOR POWER : 330kW
2. INPUT RPM : 1000 RPM△
3. OUTPUT RPM : 66.67 RPM△
4. TOTAL RATIO : 15:1 (ACTUAL : 14.85:1)
5. OIL CAPACITY : ISO VG #220 (APPROX. 200 LITERS)
6. TOTAL WEIGHT : 4,150 KG (APPROX.)

IT. NO.	NAME	MATERIAL	DWG.NO. MATERIAL CODE	Q'TY	SIZE	REMARKS
1	CASING	SS400		1		
2	INPUT PINION	SCM415		1		
3	BEVEL GEAR	SCM415		1		
4	2ND PINION	SCM415		1		
5	2nd GEAR	SCM415		1		
6	OUTPUT SHAFT	SM45C		1		
7	BEARING			2	#32224	
8	BEARING			1	#22224	
9	BEARING			2	#30326	
10	BEARING			2	#24048	
11	OIL SEAL	NBR		2	110x140x14	
12	OIL SEAL	NBR		1	240x275x16	

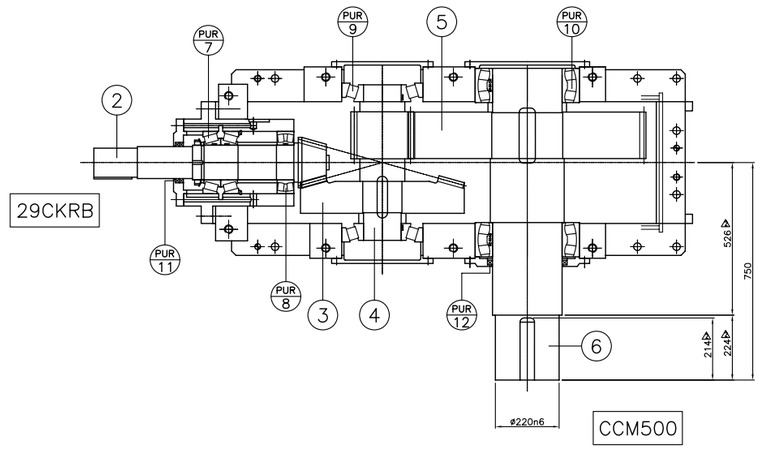

SPECIFICATION OF GEAR

STAGE	1st STAGE		2nd STAGE	
DESCRIPTION	PINION	GEAR	PINION	GEAR
GEAR TYPE	BEVEL GEAR		HELICAL GEAR	
MODULE(Mn)	9.5		9	
PRESSURE ANGLE	20°		20°	
NUMBER OF TEETH	12	43	21	87
HAND & HELIX ANGLE	RH 30.337° LH		LH 10.2° RH	
PITCH CIRCLE DIA.	156.279	560.000	192.035	795.574
FACE WIDTH	90		162	160
MATERIAL	SCM415			
HEAT TREATMENT	CARBURIZED			
HARDNESS	HRc 58+4			
GRADE	JIS 4 CLASS		JIS 2 CLASS△	

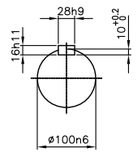

INPUT SHAFT

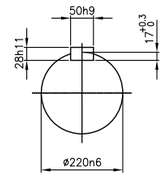

OUTPUT SHAFT

△△

CONV NO.	CV05A/B	2SETS

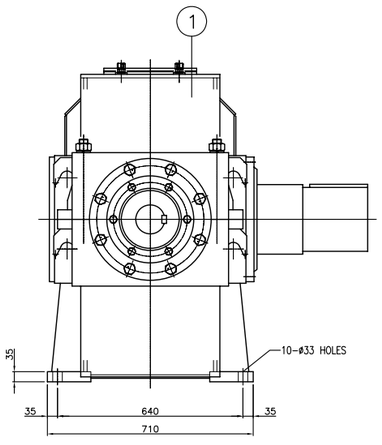

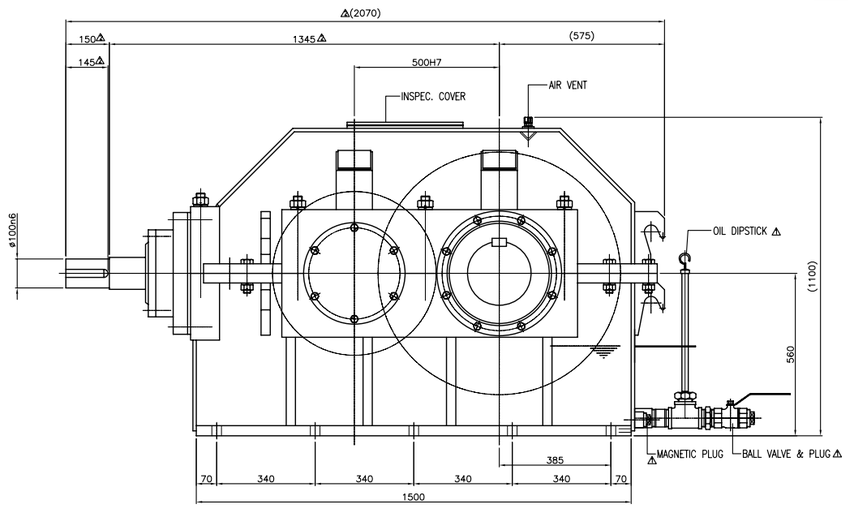

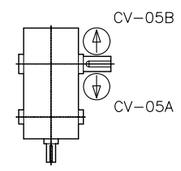

CR
△ CV-05A/B

SHAFT ARRANGEMENT & DIRECTION of ROTATION

REV	DESCRIPTION	APPR	CHCK	DRWN	DATE
△	수용가의 요청으로 도면수정	K.K.D	K.S.W	Y.J.W	12.05.07
△	수용가의 요청으로 도면수정	K.K.D	K.S.W	Y.J.W	12.04.18
△					
△					

© ???? ??? ??? (?)??? ??? ??? ?? ???? ?? ????? ????. The information written in this drawing is HYOSUNG's property, and may not be disclosed and/or reproduced without the prior official permission of HYOSUNG Corp.

TYPE	DWG. NAME
SKB50	DIMENSION DIM & ASSY

DRAWN	DESIGN	CHECKED	REVIEWED	APPROVED	SCALE	DATE
	Y.J.W 2011.12.28	K.S.W 2011.12.28		K.O 2011.12.28	1/7.5	2011-12-28

REF. DWG. NO. | UNIT mm

HYOSUNG | DWG. NO. DKBD15181 △

양식CE-14-0100-3A1

FOR CONSTRUCTION

THIS DRAWING IS THE PROPERTY OF DOOSAN HEAVY INDUSTRIES & CONSTRUCTION CO., LTD. IT IS NOT TO BE COPIED OR USED IN ANY WAY DETRIMENTAL TO THE COMPANY.

Rev.	Date	Prepared	Checked	Approved	Details of Revision
△					
△					
△					
△					
△	05.02.2013	B.SIN	Y.J.MIN	J.S.PARK	FOR CONSTRUCTION

Owner: AES-VCM MONG DUONG POWER COMPANY LIMITED

Consultant: POWER ENGINEERING CONSULTING JOINT STOCK COMPANY 2

Contractor: Doosan Heavy Industries & Construction Co., Ltd.

Project: MONG DUONG II 2x560MW(NET) COAL FIRED POWER PROJECT

Orig-Pc: T10206 | PC: XW03 | Type: ECC

	Date	Name	Scale: NONE
Drawn	05.10.2011	B.SIN	Title: COAL HANDLING SYSTEM CV-05A/B BELT CONVEYOR REDUCER OUTLINE DIMENSION
Checked	05.10.2011	Y.J.MIN	
Approved	05.10.2011	J.S.PARK	
Dept.			

Contents Code: P0

Reg. No: 628055

Doosan Heavy Industries & Construction Co., Ltd. | Dept. | Unit | Rev.: 0 | Version

Drawing No.: T10206-XW03-P0ECC00-628055 | Page-No.: 1/1

A0 (841 x 1189mm)

DWG. NO. DKBD15184 △2

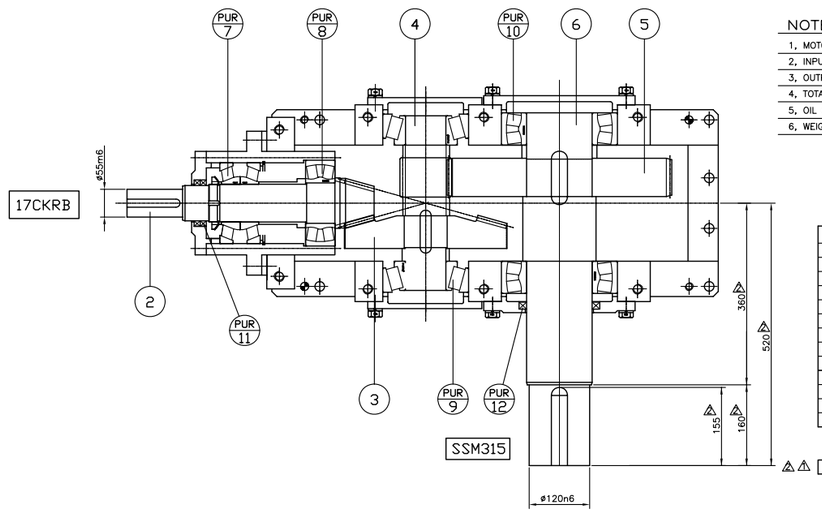

NOTE

1, MOTOR NET POWER	:	90 KW△
2, INPUT RPM	:	1500 RPM
3, OUTPUT RPM	:	88.24 RPM
4, TOTAL RATIO	:	17:1 (ACTUAL : 17.20:1)
5, OIL CAPACITY	:	ISO VG 220 (APPROX. 24 LITTERS)
6, WEIGHT	:	APPROX. 700 KG

GEAR SPECIFICATION				
STAGE	1'st STAGE		2'nd STAGE	
DESCRIPTION	PINION	GEAR	PINION	GEAR
GEAR TYPE	BEVEL		HELICAL	
MODULE (Mn)	4.9		4.5	
PRESSURE ANGLE	20°		20°	
NUMBER OF TEETH	12	43	20	96
HELIX ANGLE	L.H 36.524° R.H		R.H 10.8° L.H	
PITCH CIRCLE DIA.	89.302	320.000	91.623	439.79
FACE WIDTH	60		78	76
MATERIAL	SCM415			
HEAT TREATMENT	CARBURIZED			
HARDNESS	HRc 58+4			
GRADE	JIS 4 CLASS		JIS 2 CLASS△2	

△1 CONV NO.	CV06A/B	2SETS

IT. NO.	NAME	MATERIAL	Q'TY	SIZE	REMARKS
01	CASING	SS400	1		
02	INPUT BEVEL PINION	SCM415	1		
03	BEVEL GEAR	SCM415	1		
04	2ND PINION	SCM415	1		
05	2ND GEAR	SCM415	1		
06	OUTPUT SHAFT	SM45C	1		
07	BEARING		2	#31315	
08	BEARING		1	#22316	
09	BEARING		2	#32316	
10	BEARING		2	#22226	
11	OIL SEAL	NBR	2	70x92x12	
12	OIL SEAL	NBR	1	130x160x14	

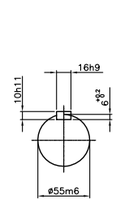

INPUT SHAFT

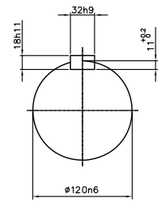

OUTPUT SHAFT

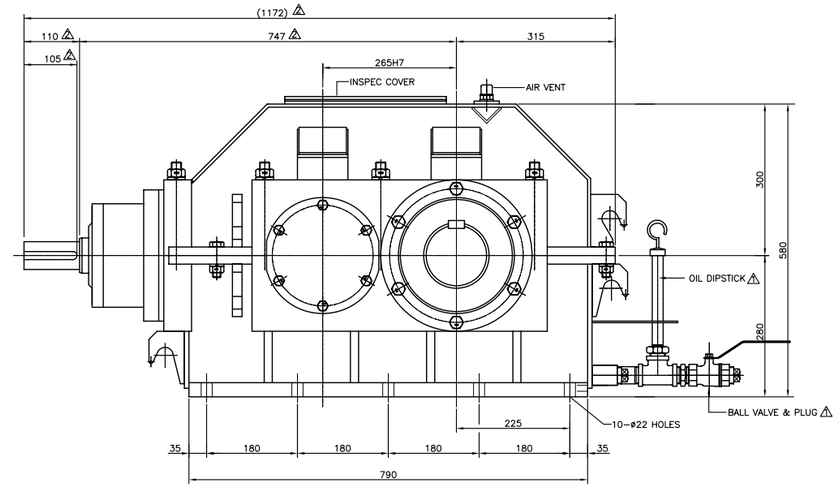

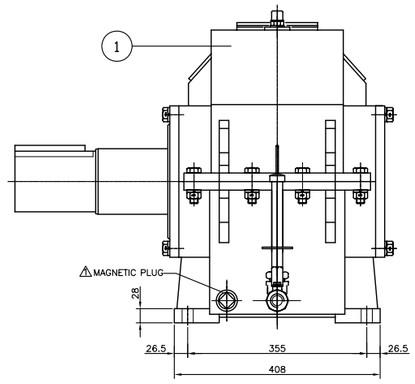

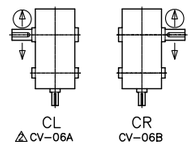

SHAFT ARRANGEMENT & DIRECTION of ROTATION

REV	DESCRIPTION	APPR	CHCK	DRWN	DATE
△1	수용기의 요청으로 도면 수정	K.K.D	K.S.W	Y.J.W	12.03.27
△2	수용기의 요청으로 도면 수정	K.K.D	K.S.W	Y.J.W	12.04.10
△					
△					

? ???? ??? ??? (1)??? ???? ??? ?? ???? ?? ????? ????. The information written in this drawing is HYOSUNG's property, and may not be disclosed and/or reproduced without the prior official permission of HYOSUNG Corp.

TYPE	DWG. NAME
SKB26	DIMENSION DIM & ASSY

DRAWN	DESIGN	CHECKED	REVIEWED	APPROVED	SCALE	DATE
	Y 2011.12.28 J.W	K 2011.12.28 S.W		K 2011.12.28 K.D	1/6	2011-12-28

REF. DWG. NO.

UNIT: mm

HYOSUNG

DWG. NO. DKBD15184 △2

※NCE-14-0100-3A2

FOR CONSTRUCTION

THIS DRAWING IS THE PROPERTY OF DOOSAN HEAVY INDUSTRIES & CONSTRUCTION CO., LTD.
IT IS NOT TO BE COPIED OR USED IN ANY WAY DETRIMENTAL TO THE COMPANY.

Rev.	Date	Prepared	Checked	Approved	Details of Revision
△					
△					
△					
△					
△2	05.02.2013	B.SIN	Y.I.MIN	J.S.PARK	FOR CONSTRUCTION

Owner: AES-VCM MONG DUONG POWER COMPANY LIMITED

Consultant: POWER ENGINEERING CONSULTING JOINT STOCK COMPANY 2

Contractor: Doosan Heavy Industries & Construction Co., Ltd.

Project: MONG DUONG II 2x560MW(NET) COAL FIRED POWER PROJECT

Orig-Pc: T10206
PC: XW03

	Date	Name
Drawn	05.10.2011	B.SIN
Checked	05.10.2011	Y.I.MIN
Approved	05.10.2011	J.S.PARK
Dept.		

Scale: NONE

Title: COAL HANDLING SYSTEM CV-06A/B BELT CONVEYOR REDUCER OUTLINE DIMENSION

Type: ECC
Contents Code: P0
Dwg. No: 628056
Rev.: 0
Version:

Doosan Heavy Industries & Construction Co., Ltd.
Dept.
Unit

Drawing No.: T10206-XW03-P0ECC00-628056
Page-No.: 1/1

A0 (841 x 1189mm)

DWG. NO.	DKGD10749G05	0

IT. NO.	NAME	MATERIAL	DWG.NO. MATERIAL COOD	Q'TY	SIZE	REMARKS

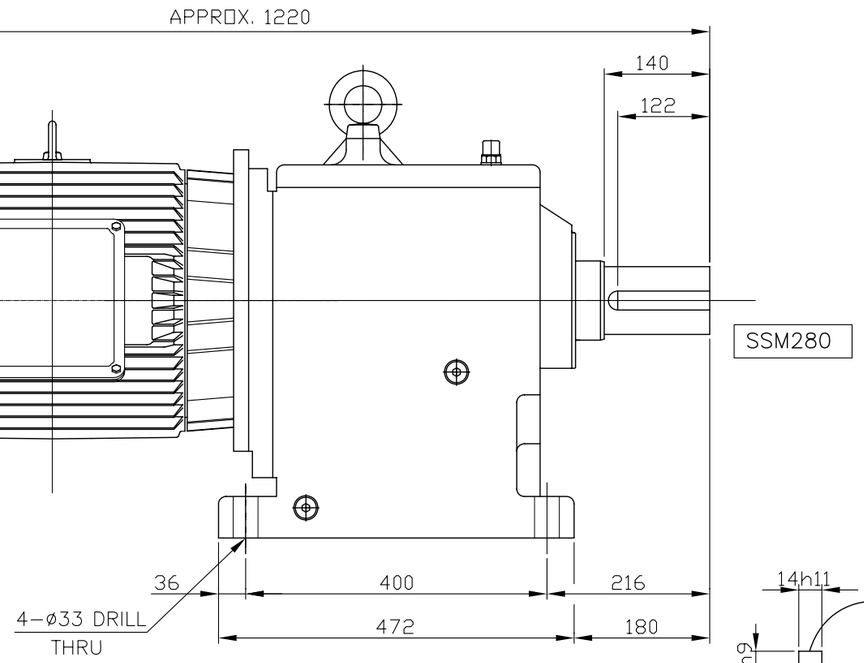

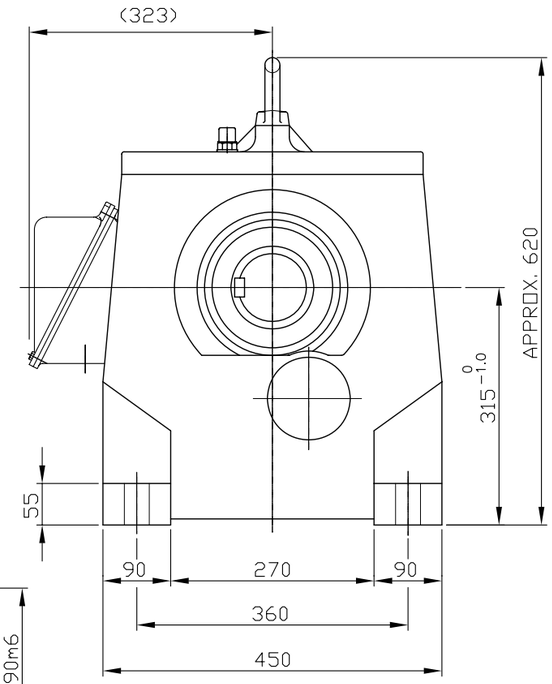

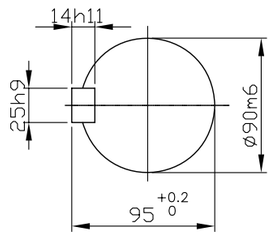

OUTPUT SHAFT

Conv. No.	Q'ty
CF-01A/B	2

NOTE : 감속비가 1/15이하일 경우는 ( )안의 베어링은 제외시키고
*** 부본의 베어링은 # NJ309E, # 21310, # NJ310E를 사용함.

REV	DESCRIPTION	APPR	CHCK	DRWN	DATE				
△						B	# 6212ZZ	# 6312ZZ	OIL SEAL
△						R	(# 6308)	(# NJ308E)	INPUT D(M) 60 x 82 x 12
△						G	*** # NJ310E	# NJ310E	OUTPUT D(M) 105 x 160 x 14
△							# 22212	# 22218	WEIGHT : 505 kg
△							Lubricant : ISO VG 220		MOTOR FRAME 180L FR

? ???? ??? ??? (?)??? ???? ??? ?? ???? ?? ????? ????. The information written in this drawing is HYOSUNG's property, and may not be disclosed and/or reproduced without the prior official permission of HYOSUNG Corp.

TYPE	HHM32	DWG. NAME	DIMENSION
DRAWN: ? 12.04.12 ??	DESIGN: ? 12.04.12 ??	CHECKED	REVIEWED
APPROVED: ? 12.04.12 ??	SCALE 1/6	DATE 2012-04-12	
HYOSUNG	REF. DWG. NO.	GKDS472G05	UNIT mm
	DWG. NO.	DKGD10749G05	0

양식CE-14-0100-3A3

FOR CONSTRUCTION

THIS DRAWING IS THE PROPERTY OF DOOSAN HEAVY INDUSTRIES & CONSTRUCTION CO., LTD.
IT IS NOT TO BE COPIED OR USED IN ANY WAY DETRIMENTAL TO THE COMPANY.

Rev.	Date	Prepared	Checked	Approved	Details of Revision
△					
△					
△					
△					
△	05.02.2013	ILSIN	Y.I.MIN	J.S.PARK	FOR CONSTRUCTION

Owner: AES-VCM MONG DUONG POWER COMPANY LIMITED

Consultant: POWER ENGINEERING CONSULTING JOINT STOCK COMPANY 2

Contractor: Doosan Heavy Industries & Construction Co., Ltd.

Project: MONG DUONG II 2x560MW(NET) COAL FIRED POWER PROJECT

Orig-Pc: T10206
PC: XW03
Type: ECC
Contents Code: P0

	Date	Name	Scale: NONE
Drawn	05.10.2011	ILSIN	
Checked	05.10.2011	Y.I.MIN	
Approved	05.10.2011	J.S.PARK	
Dept.			

Title: COAL HANDLING SYSTEM CF-01A/B BELT CONVEYOR REDUCER OUTLINE DIMENSION

Doosan Heavy Industries & Construction Co., Ltd. | Dept. | Unit

Reg. No: 628057
Rev.: 0
Version:

Drawing No.: T10206-XW03-P0ECC00-628057
Page-No.: 1/1

A0 (841 x 1189mm)

3. CONVEYOR COUPLING

A0 (841 x 1189mm)

DRAWING LIST

NO	DWG. NO	DWG. TITLE	REVISION						REMARK	NO	DWG. NO	DWG. TITLE	REVISION						REMARK
			0	1	2	3	4	5					0	1	2	3	4	5	
1	T10206-XW03-P0ECC00-625021	COAL HANDLING SYSTEM BELT CONVEYOR CV-01A/B FLUID COUPLING ASSEMBLY (19CKRB)	2013-02-05																
2	T10206-XW03-P0ECC00-625022	COAL HANDLING SYSTEM BELT CONVEYOR CV-02A/B FLUID COUPLING ASSEMBLY (19CKRB)	2013-02-05																
3	T10206-XW03-P0ECC00-625023	COAL HANDLING SYSTEM BELT CONVEYOR CV-03A/B FLUID COUPLING ASSEMBLY (24CKRB)	2013-02-05																
4	T10206-XW03-P0ECC00-625024	COAL HANDLING SYSTEM BELT CONVEYOR CV-04A/B FLUID COUPLING ASSEMBLY (24CKRB)	2013-02-05																
5	T10206-XW03-P0ECC00-625025	COAL HANDLING SYSTEM BELT CONVEYOR CV-05A/B FLUID COUPLING ASSEMBLY (29CKRB)	2013-02-05																
6	T10206-XW03-P0ECC00-625026	COAL HANDLING SYSTEM BELT CONVEYOR CV-06A/B FLUID COUPLING ASSEMBLY (17CKRB)	2013-02-05																
7	T10206-XW03-P0ECC00-625027	COAL HANDLING SYSTEM BELT CONVEYOR CV-01A/B GEAR COUPLING ASSEMBLY (SSM315)	2013-02-05																
8	T10206-XW03-P0ECC00-625028	COAL HANDLING SYSTEM BELT CONVEYOR CV-02A/B GEAR COUPLING ASSEMBLY (SSM315)	2013-02-05																
9	T10206-XW03-P0ECC00-625029	COAL HANDLING SYSTEM BELT CONVEYOR CV-03A/B GEAR COUPLING ASSEMBLY (CCM450)	2013-02-05																
10	T10206-XW03-P0ECC00-625030	COAL HANDLING SYSTEM BELT CONVEYOR CV-04A/B GEAR COUPLING ASSEMBLY (SSM355)	2013-02-05																
11	T10206-XW03-P0ECC00-625031	COAL HANDLING SYSTEM BELT CONVEYOR CV-05A/B GEAR COUPLING ASSEMBLY (CCM500)	2013-02-05																
12	T10206-XW03-P0ECC00-625032	COAL HANDLING SYSTEM BELT CONVEYOR CV-06A/B GEAR COUPLING ASSEMBLY (SSM315)	2013-02-05																
13	T10206-XW03-P0ECC00-625033	COAL HANDLING SYSTEM BELT CONVEYOR CF-01A/B GEAR COUPLING ASSEMBLY (SSM280)	2013-02-05																

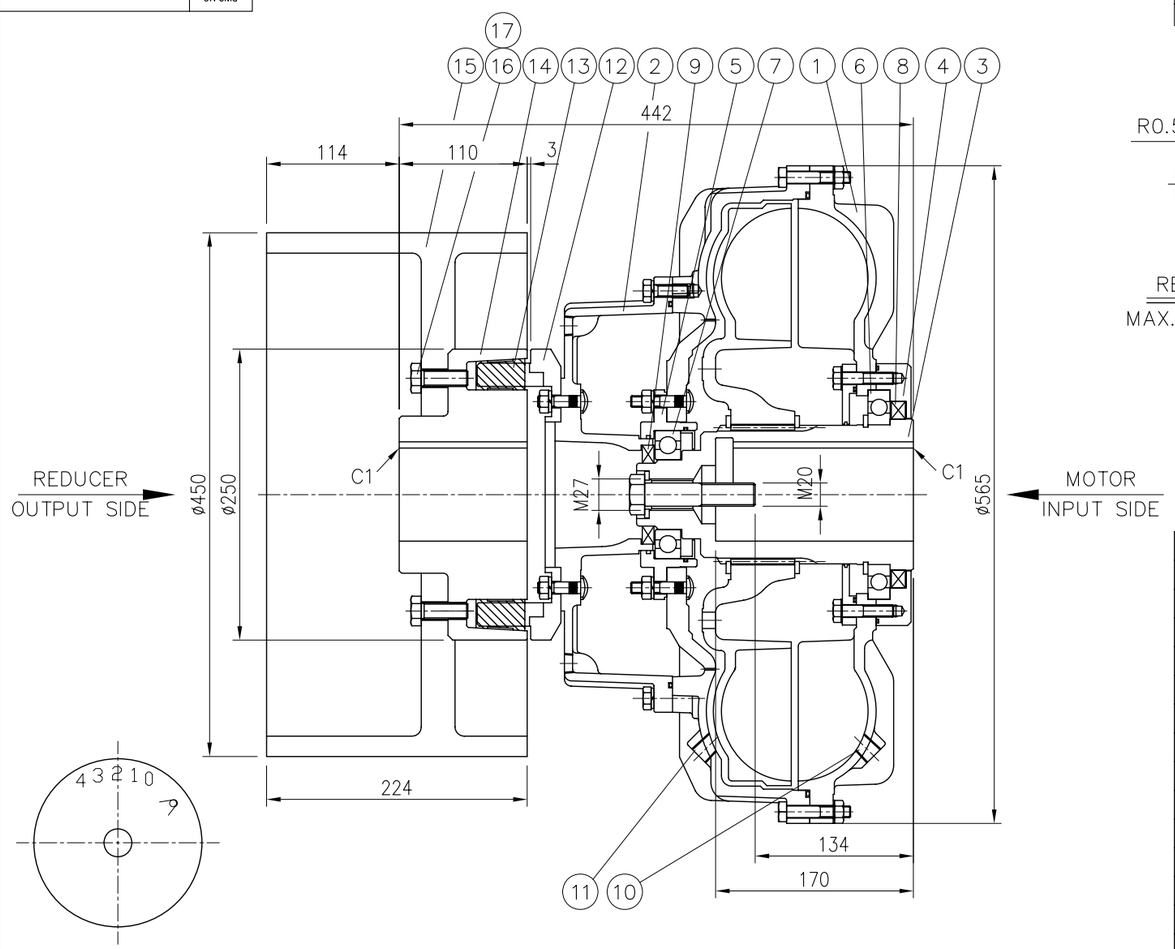

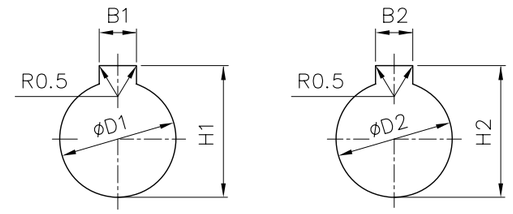

REDUCER SIDE
MAX.SHAFT DIA: ø90

MOTOR SIDE
MAX.SHAFT DIA: ø85

MARK	DATE	REVISION	REASON	SIGNATURE

NO.	DESCRIPTIONS	SIZE	MAT'L	Q'TY	WEIGHT (kgf)	REMARKS
17	SPRING WASHER	M14	HSWR62	8		
16	WRENCH BOLT	M14x40L	12.9	8		
15	BRAKE DRUM	ø450x224	GDC450	1		
14	BODY	ø250x110	GDC450	1		
13	RUBBERY BLOCK	SF50	NBR	16		
12	SOCKET	ø250x72	GDC450	1		
11	PLUG	PT 3/8	PURCH.	1		
10	FUSIBLE PLUG	PT 3/8	PURCH.	1		
9	SEAL	54x85x10	VITON	1		
8	SEAL	130x160x12	VITON	1		
7	BALL BEARING	#6212	PURCH.	1		
6	BALL BEARING	#16024	PURCH.	1		
5	BEARING CARRIER	ø180x47	SM45C	1		
4	BEARING CARRIER	ø225x30	SM45C	1		
3	SHAFT	ø130x238	SM45C-H	1		
2	CHAMBER	19CK	AL.ALLOY	1		
1	CASE	19K	AL.ALLOY	1		

GENERAL TOLERANCE (mm)	
0.5~3	±0.1
3~6	±0.1
6~30	±0.2
30~120	±0.3
120~400	±0.5
400~1000	±0.8
1000~2000	±1.2
2000~4000	±2

SURFACE ROUGHNESS		
Ra	Rmax	FINISH MARK
		~
25/	100S	▽
12.5/	50S	
6.3/	25S	▽▽
3.2/	12.5S	
1.6/	6.3S	▽▽▽
0.8/	3.2S	
0.2/	0.8S	▽▽▽▽
0.1/	0.4S	

CUSTOMER	STANDARD	SCALE	1/4	PROJECTION
TITLE	19 CKRB FLUID COUPLING	DWG.NO.	CKRB1900	REV. NO. 1
		REF.NO.		

DRAWN	CHECKED	APPROVED
J.A. KIM 2012.05.24		Y.D. SON 2012.05.24

NARA CORPORATION

< OIL POINT >

RECOMENDED OIL	SHELL
ISO 32 HM	TELLUS 32
OIL QUANTITY	12.3L
OIL POINT	2

REDUCER SIDE			MOTOR SIDE		
D1	B1	H1	D2	B2	H2
+0.030 0	±0.026	+0.2 0	+0.071 +0.036	±0.026	+0.2 0
ø70H7	20	74.9	ø85F7	22	90.4

MFG. Q'TY : TOTAL = 2 SETS

ITEM NO.	Q'TY	REF. DWG. NO.
CV-01A	1	T10206-UC02-P0ECC10-623101
CV-01B	1	T10206-UC02-P0ECC10-623101

FOR CONSTRUCTION

THIS DRAWING IS THE PROPERTY OF DOOSAN HEAVY INDUSTRIES & CONSTRUCTION CO., LTD.
IT IS NOT TO BE COPIED OR USED IN ANY WAY DETRIMENTAL TO THE COMPANY.

Rev.	Date	Prepared	Checked	Approved	Details of Revision
1	05.01.2013	ILSIN	Y.J.MIN	J.S.PARK	FOR CONSTRUCTION

Owner: AES-VCM MONG DUONG POWER COMPANY LIMITED

Consultant: POWER ENGINEERING CONSULTING JOINT STOCK COMPANY 2

Contractor: Doosan Heavy Industries & Construction Co., Ltd.

Project: MONG DUONG II 2x560MW(NET) COAL FIRED POWER PROJECT

Orig-Pc: T10206
PC: XW03
Type: ECC
Contents Code: P0

	Date	Name
Drawn	30.04.2012	ILSIN
Checked	30.04.2012	Y.J.MIN
Approved	30.04.2012	J.S.PARK

Scale: NONE

Title: COAL HANDLING SYSTEM BELT CONVEYOR CV-01A/B FLUID COUPLING ASSEMBLY (19CKRB)

Reg. No: 625021
Rev.: 0
Version:

Dept.: Doosan Heavy Industries & Construction Co., Ltd.

Drawing No.: T10206-XW03-P0ECC00-625021

Page-No.: 1/1

A1 (841 x 594mm)

MARK	DATE	REVISION	REASON	SIGNATURE

DWG.NO.

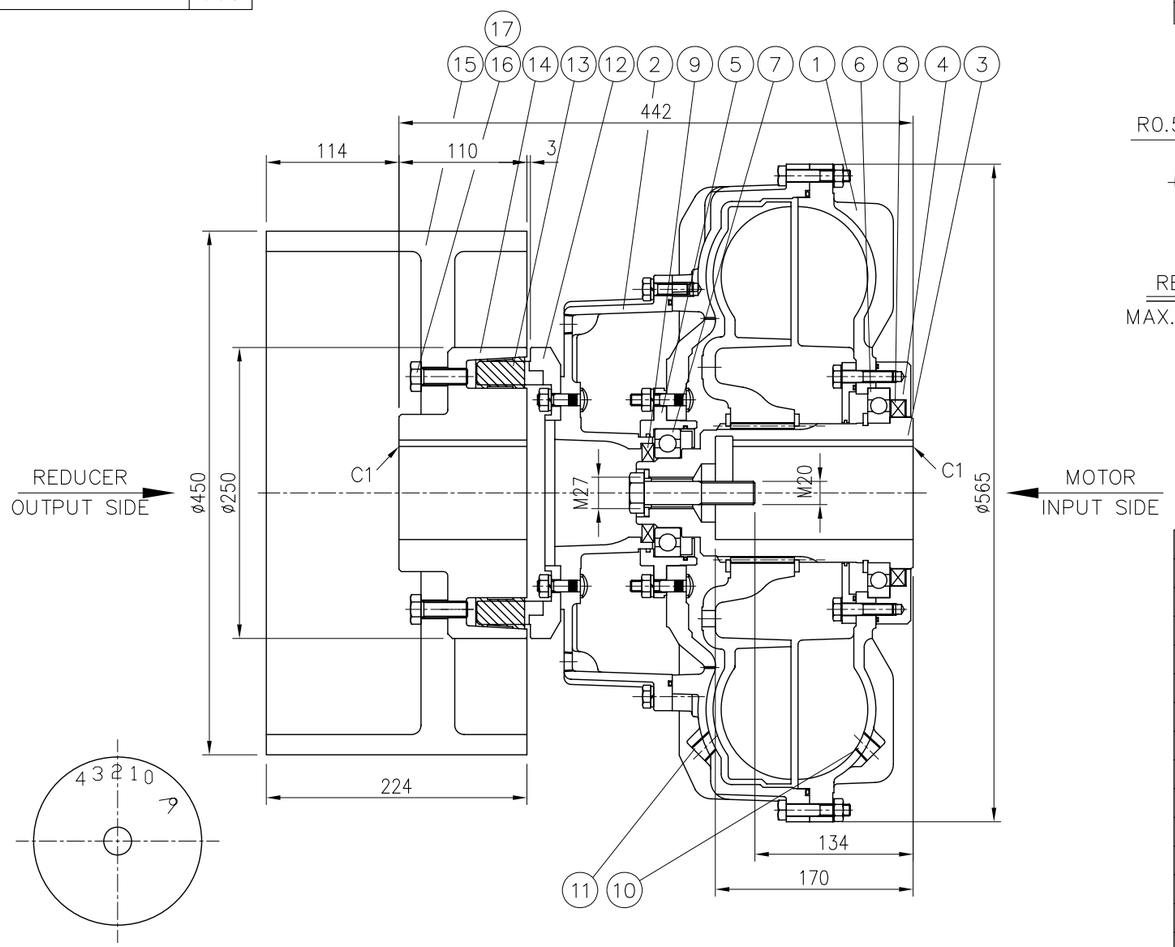

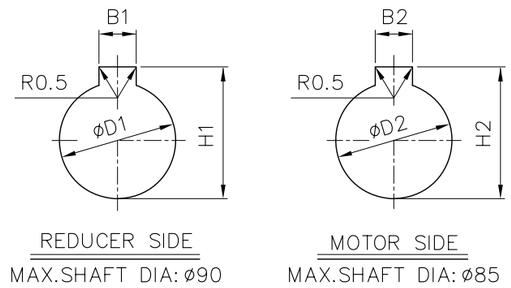

17	SPRING WASHER	M14	HSWR62	8		
16	WRENCH BOLT	M14x40L	12.9	8		
15	BRAKE DRUM	ø450x224	GDC450	1		
14	BODY	ø250x110	GDC450	1		
13	RUBBERY BLOCK	SF50	NBR	16		
12	SOCKET	ø250x72	GDC450	1		
11	PLUG	PT 3/8	PURCH.	1		
10	FUSIBLE PLUG	PT 3/8	PURCH.	1		
9	SEAL	54x85x10	VITON	1		
8	SEAL	130x160x12	VITON	1		
7	BALL BEARING	#6212	PURCH.	1		
6	BALL BEARING	#16024	PURCH.	1		
5	BEARING CARRIER	ø180x47	SM45C	1		
4	BEARING CARRIER	ø225x30	SM45C	1		
3	SHAFT	ø130x238	SM45C-H	1		
2	CHAMBER	19CK	AL.ALLOY	1		
1	CASE	19K	AL.ALLOY	1		
NO.	DESCRIPTIONS	SIZE	MAT'L	Q'TY	WEIGHT (kgf)	REMARKS

MFG. Q'TY : TOTAL = 2 SETS

ITEM NO.	Q'TY	REF. DWG. NO.
CV-02A	1	T10206-UC02-P0ECC20-623101
CV-02B	1	T10206-UC02-P0ECC20-623101

< OIL POINT >

RECOMENDED OIL	SHELL
ISO 32 HM	TELLUS 32
OIL QUANTITY	12.3L
OIL POINT	2

REDUCER SIDE			MOTOR SIDE		
D1	B1	H1	D2	B2	H2
+0.030 0	±0.026	+0.2 0	+0.071 +0.036	±0.026	+0.2 0
ø70H7	20	74.9	ø85F7	22	90.4

GENERAL TOLERANCE (mm)		SURFACE ROUGHNESS Ra	Rmax	FINISH MARK
0.5~3	±0.1	√		~
3~6	±0.1	25/	100S	▽
6~30	±0.2	12.5/	50S	
30~120	±0.3	6.3/	25S	▽▽
120~400	±0.5	3.2/	12.5S	
400~1000	±0.8	1.6/	6.3S	▽▽▽
1000~2000	±1.2	0.8/	3.2S	
2000~4000	±2	0.3/	0.8S	▽▽▽▽
		0.1/	0.4S	

CUSTOMER	STANDARD	SCALE	1/4	PROJECTION
TITLE	19 CKRB FLUID COUPLING	DWG.NO.	CKRB1900	REV. NO. 1
		REF.NO.		
DRAWN	CHECKED	APPROVED		
J.A. KIM 2012.05.24		Y.D. SON 2012.05.24	NARA CORPORATION	

FOR CONSTRUCTION

THIS DRAWING IS THE PROPERTY OF DOOSAN HEAVY INDUSTRIES & CONSTRUCTION CO., LTD. IT IS NOT TO BE COPIED OR USED IN ANY WAY DETRIMENTAL TO THE COMPANY.

Rev.	Date	Prepared	Checked	Approved	Details of Revision
△					
△					
△					
△					
△	05.02.2013	ILSIN	Y.I.MIN	J.S.PARK	FOR CONSTRUCTION

Owner: AES-VCM MONG DUONG POWER COMPANY LIMITED

Consultant: POWER ENGINEERING CONSULTING JOINT STOCK COMPANY 2

Contractor: Doosan Heavy Industries & Construction Co., Ltd.

Project: MONG DUONG II 2x560MW(NET) COAL FIRED POWER PROJECT

Orig-Pc: T10206
PC: XW03
Type: ECC
Contents Code: P0

	Date	Name
Drawn	30.04.2012	ILSIN
Checked	30.04.2012	Y.I.MIN
Approved	30.04.2012	J.S.PARK

Scale: NONE

Title: COAL HANDLING SYSTEM BELT CONVEYOR CV-02A/B FLUID COUPLING ASSEMBLY (19CKRB)

Dept.

Doosan Heavy Industries & Construction Co., Ltd. | Dept. | Unit

Reg. No: 625022
Rev.: 0
Version:

Drawing No.: T10206-XW03-P0ECC00-625022

Page-No.: 1/1

A1 (841 x 594mm)

MARK	DATE	REVISION	REASON	SIGNATURE

DWG.NO.

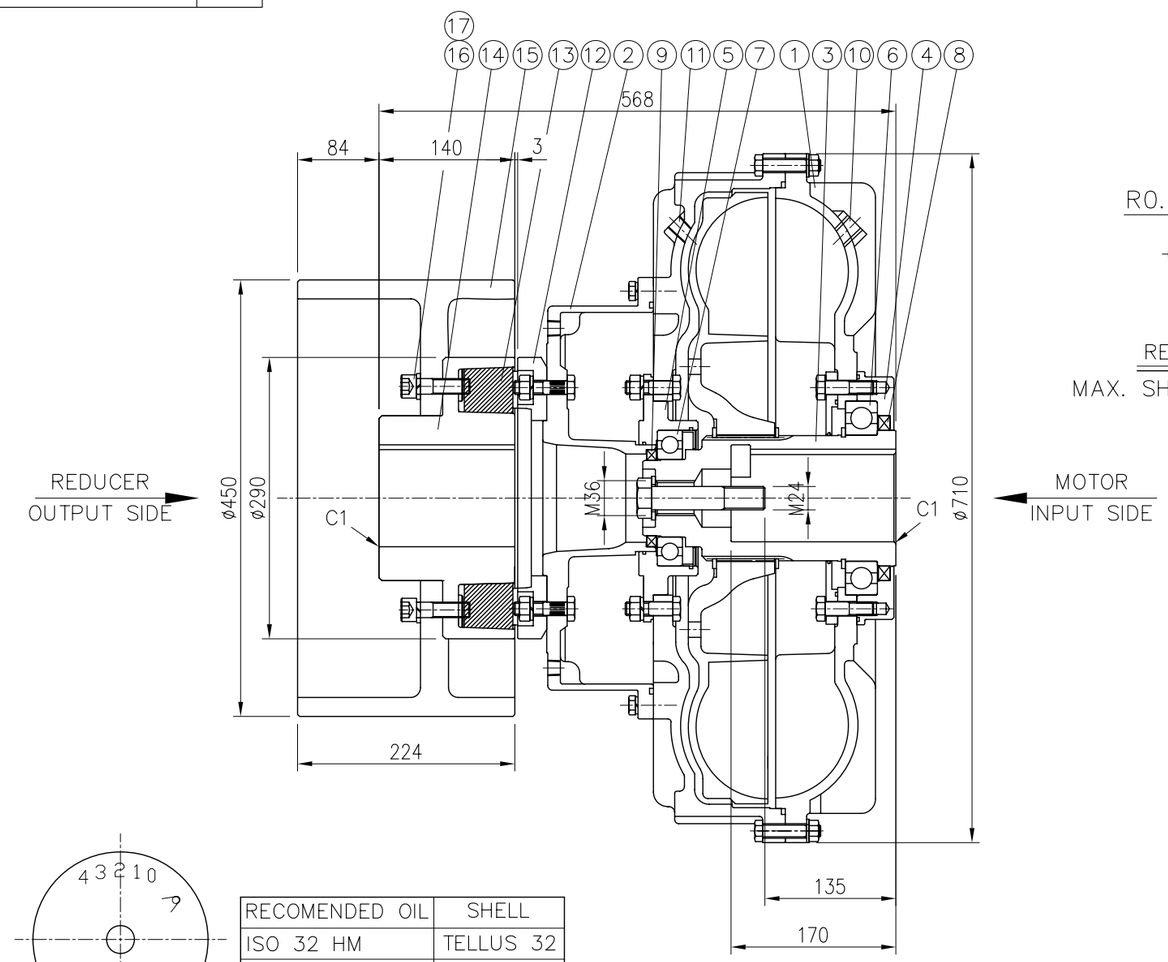

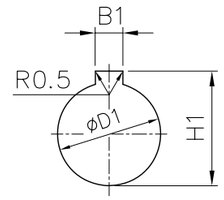

REDUCER SIDE

MAX. SHAFT DIA. : ø110

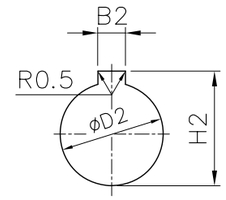

MOTOR SIDE

MAX. SHAFT DIA. : ø100

17	SPRING WASHER	M16	HSWR62	1		
16	WRENCH BOLT	M16	12.9	1		
15	BRAKE DRUM	ø450×224	GDC450	1		
14	BODY	ø290×140	GDC450	1		
13	RUBBER BLOCK	SF60	NBR	16		
12	SOCKET	ø290×85	GDC450	1		
11	PLUG	PT 3/8	PURCH.	1		
10	FUSIBLE PLUG	PT 3/8	PURCH.	1		
9	SEAL	78×100×10	VITON	1		
8	SEAL	140×170×12	VITON	1		
7	BALL BEARING	#6216	PURCH.	1		
6	BALL BEARING	#6026	PURCH.	1		
5	BEARING CARRIER	ø255×61	SM45C	1		
4	BEARING CARRIER	ø261×38	SM45C	1		
3	SHAFT	ø140	SM45C-H	1		
2	CHAMBER	24CK	AL. ALLOY	1		
1	CASE	24K	AL. ALLOY	1		
NO.	DESCRIPTIONS	SIZE	MAT'L	Q'TY	WEIGHT (kgf)	REMARKS

MFG. Q'TY : TOTAL = 2 SETS

ITEM NO.	Q'TY	REF. DWG. NO.
CV-03A	1	T10206-UC02-P0ECC31-623101
CV-03B	1	T10206-UC02-P0ECC32-623101

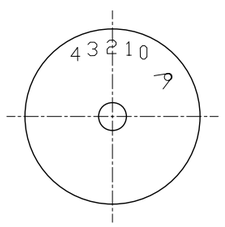

< OIL POINT >

RECOMENDED OIL	SHELL
ISO 32 HM	TELLUS 32
OIL QUANTITY	24.6 L
OIL POINT	2

REDUCER SIDE			MOTOR SIDE		
D1	B1	H1	D2	B2	H2
+0.030 / 0	±0.026	+0.2 / 0	+0.071 / +0.036	±0.026	+0.2 / 0
ø75H7	20	79.9	ø95F7	25	100.4

GENERAL TOLERANCE (mm)		SURFACE ROUGHNESS Ra	Rmax	FINISH MARK
0.5~3	±0.1	√		~
3~6	±0.1	25/	100S	▽
6~30	±0.2	12.5/	50S	
30~120	±0.3	6.3/	25S	▽▽
120~400	±0.5	3.2/	12.5S	
400~1000	±0.8	1.6/	6.3S	▽▽▽
1000~2000	±1.2	0.8/	3.2S	
2000~4000	±2	0.1/	0.8S	▽▽▽▽
			0.4S	

CUSTOMER	STANDARD	SCALE 1/5	PROJECTION
TITLE	24 CKRB FLUID COUPLING	DWG.NO. CKRB2400	REV. NO. 1
		REF.NO.	
DRAWN	CHECKED	APPROVED	
J.A. KIM 2012.05.24		Y.D. SON 2012.05.24	NARA CORPORATION

FOR CONSTRUCTION

THIS DRAWING IS THE PROPERTY OF DOOSAN HEAVY INDUSTRIES & CONSTRUCTION CO., LTD. IT IS NOT TO BE COPIED OR USED IN ANY WAY DETRIMENTAL TO THE COMPANY.

Rev.	Date	Prepared	Checked	Approved	Details of Revision
1	05.02.2013	ILSIN	Y.I.MIN	J.S.PARK	FOR CONSTRUCTION

Owner: AES-VCM MONG DUONG POWER COMPANY LIMITED

Consultant: POWER ENGINEERING CONSULTING JOINT STOCK COMPANY 2

Contractor: Doosan Heavy Industries & Construction Co., Ltd.

Project: MONG DUONG II 2x560MW(NET) COAL FIRED POWER PROJECT

Orig-Pc: T10206 PC XW03

	Date	Name
Drawn	30.04.2012	ILSIN
Checked	30.04.2012	Y.I.MIN
Approved	30.04.2012	J.S.PARK
Dept.		

Scale: NONE

Title: COAL HANDLING SYSTEM BELT CONVEYOR CV-03A/B FLUID COUPLING ASSEMBLY (24CKRB)

Type: ECC

Contents Code: P0

Reg. No: 625023

Doosan Heavy Industries & Construction Co., Ltd. | Dept. | Unit | Rev. 0 | Version

Drawing No.: T10206-XW03-P0ECC00-625023

Page-No. 1/1

A1 (841 x 594mm)

DWG.NO.					
	MARK	DATE	REVISION	REASON	SIGNATURE

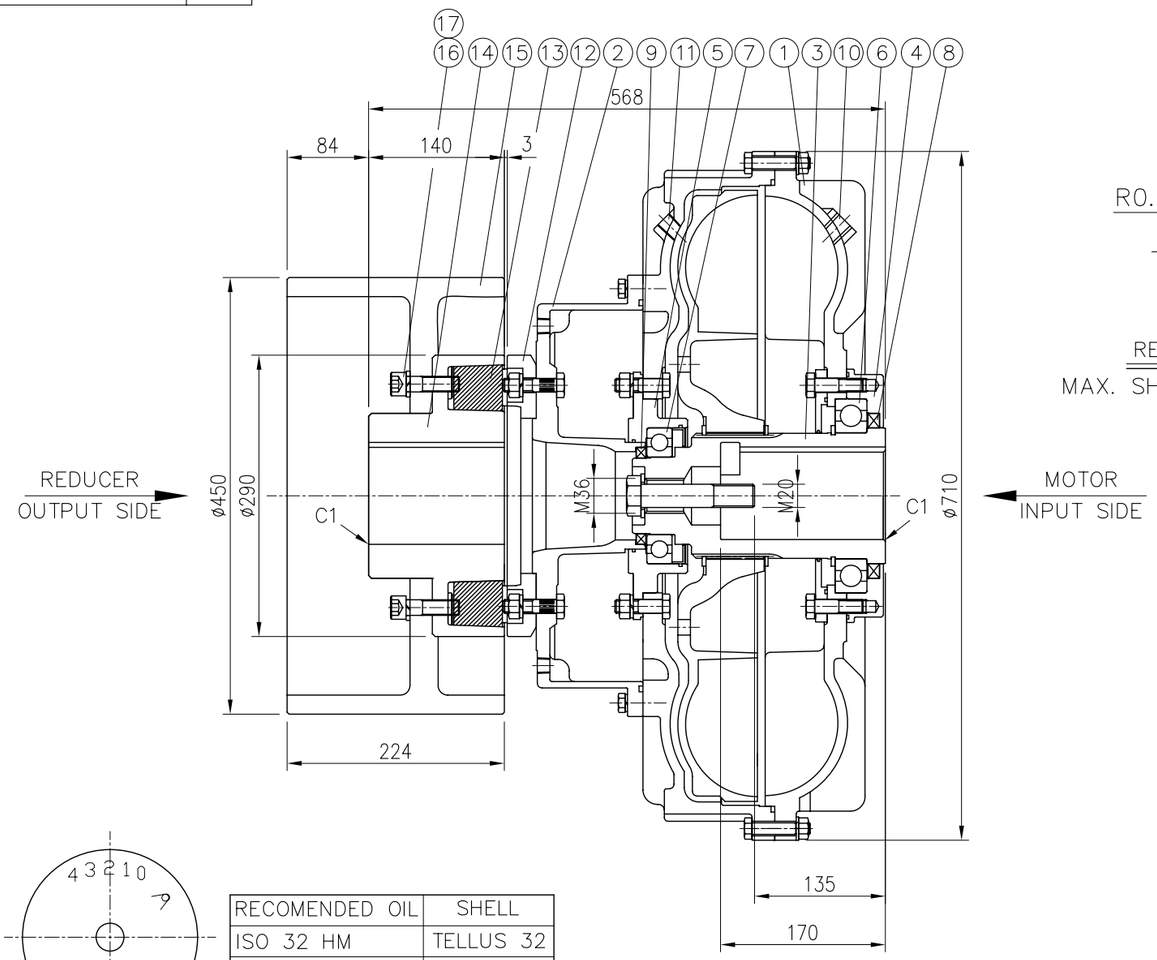

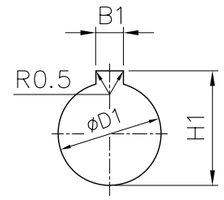

REDUCER SIDE

MAX. SHAFT DIA. : ø110

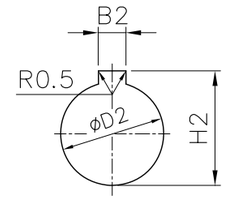

MOTOR SIDE

MAX. SHAFT DIA. : ø100

17	SPRING WASHER	M16	HSWR62	1		
16	WRENCH BOLT	M16	12.9	1		
15	BRAKE DRUM	ø450×224	GDC450	1		
14	BODY	ø290×140	GDC450	1		
13	RUBBER BLOCK	SF60	NBR	16		
12	SOCKET	ø290×85	GDC450	1		
11	PLUG	PT 3/8	PURCH.	1		
10	FUSIBLE PLUG	PT 3/8	PURCH.	1		
9	SEAL	78×100×10	VITON	1		
8	SEAL	140×170×12	VITON	1		
7	BALL BEARING	#6216	PURCH.	1		
6	BALL BEARING	#6026	PURCH.	1		
5	BEARING CARRIER	ø255×61	SM45C	1		
4	BEARING CARRIER	ø261×38	SM45C	1		
3	SHAFT	ø140	SM45C-H	1		
2	CHAMBER	24CK	AL. ALLOY	1		
1	CASE	24K	AL. ALLOY	1		
NO.	DESCRIPTIONS	SIZE	MAT'L	Q'TY	WEIGHT (kgf)	REMARKS

MFG. Q'TY : TOTAL = 2 SETS

ITEM NO.	Q'TY	REF. DWG. NO.
CV-04A	1	T10206-UC02-P0ECC40-623101
CV-04B	1	T10206-UC02-P0ECC40-623101

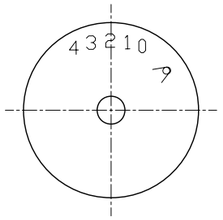

< OIL POINT >

RECOMENDED OIL	SHELL
ISO 32 HM	TELLUS 32
OIL QUANTITY	24.6 L
OIL POINT	2

REDUCER SIDE			MOTOR SIDE		
D1	B1	H1	D2	B2	H2
+0.030 0	±0.026	+0.2 0	+0.071 +0.036	±0.026	+0.2 0
ø70H7	20	74.9	ø95F7	25	100.4

GENERAL TOLERANCE (mm)		SURFACE ROUGHNESS Ra	Rmax	FINISH MARK
0.5~3	±0.1			
3~6	±0.1	25/	100S	
6~30	±0.2	12.5/	50S	
30~120	±0.3	6.3/	25S	
120~400	±0.5	3.2/	12.5S	
400~1000	±0.8	1.6/	6.3S	
1000~2000	±1.2	0.8/	3.2S	
2000~4000	±2	0.4/	0.8S	
			0.4S	

CUSTOMER	STANDARD	SCALE	1/5	PROJECTION
TITLE	24 CKRB FLUID COUPLING	DWG.NO.	CKRB2400	REV. NO. 1
		REF.NO.		

DRAWN	CHECKED	APPROVED
J.A. KIM 2012.05.24		Y.D. SON 2012.05.24

NARA CORPORATION

FOR CONSTRUCTION

THIS DRAWING IS THE PROPERTY OF DOOSAN HEAVY INDUSTRIES & CONSTRUCTION CO., LTD. IT IS NOT TO BE COPIED OR USED IN ANY WAY DETRIMENTAL TO THE COMPANY.

Rev.	Date	Prepared	Checked	Approved	Details of Revision
0	05.02.2013	ILSIN	Y.I.MIN	J.S.PARK	FOR CONSTRUCTION

Owner: AES-VCM MONG DUONG POWER COMPANY LIMITED

Consultant: POWER ENGINEERING CONSULTING JOINT STOCK COMPANY 2

Contractor: Doosan Heavy Industries & Construction Co., Ltd.

Project: MONG DUONG II 2x560MW(NET) COAL FIRED POWER PROJECT

	Date	Name
Drawn	30.04.2012	ILSIN
Checked	30.04.2012	Y.I.MIN
Approved	30.04.2012	J.S.PARK
Dept.		

Scale: NONE

Title: COAL HANDLING SYSTEM BELT CONVEYOR CV-04A/B FLUID COUPLING ASSEMBLY (24CKRB)

Doosan Heavy Industries & Construction Co., Ltd. | Dept. | Unid

Drawing No.: T10206-XW03-P0ECC00-623101

Orig-Pc: T10206 | PC: XW03 | Type: ECC | Contents Code: P0 | Reg. No: 623101 | Rev.: 0 | Version | Page-No.: 1/1

A1 (841 x 594mm)

MARK	DATE	REVISION	REASON	SIGNATURE

DWG.NO.

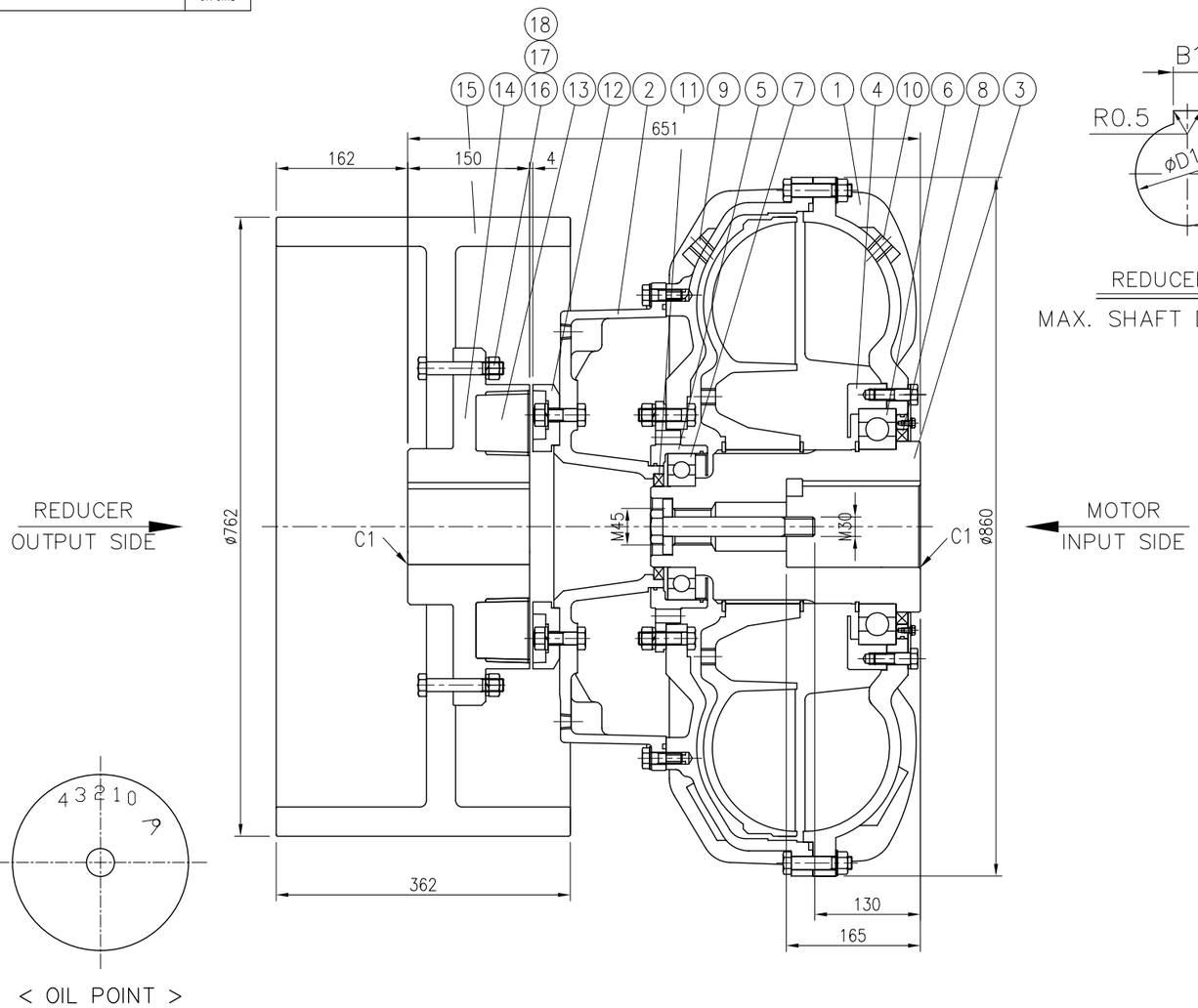

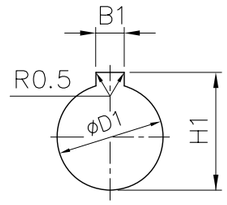

REDUCER SIDE

MAX. SHAFT DIA. : ø120

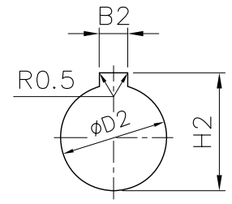

MOTOR SIDE

MAX. SHAFT DIA. : ø135

NO.	DESCRIPTIONS	SIZE	MAT'L	Q'TY	WEIGHT (kgf)	REMARKS
18	NUT	M16	8T	14		
17	SPRING WASHER	M16	HSWR62	14		
16	REAMER BOLT	M16×ø18×116	SM45C-H	14		
15	BRAKE DRUM	ø762×362	GDC450	1		
14	BODY	ø350×150	GDC450	1		
13	RUBBER BLOCK	SF80	NBR	16		
12	SOCKET	ø350×150	GDC450	1		
11	PLUG	PT 1/2	PURCH.	1		
10	FUSIBLE PLUG	PT 1/2	PURCH.	1		
9	SEAL	100×130×12	VITON	1		
8	SEAL	210×240×15	VITON	1		
7	BALL BEARING	#6022	PURCH.	1		
6	BALL BEARING	#6038	PURCH.	1		
5	BEARING CARRIER	ø308×50	SM45C	1		
4	BEARING CARRIER	ø350×40	SM45C	1		
3	SHAFT	ø210×332	SM45C-H	1		
2	CHAMBER	29CK	AL. ALLOY	1		
1	CASE	29K	AL. ALLOY	1		

MFG. Q'TY : TOTAL = 2 SETS

ITEM NO.	Q'TY	REF. DWG. NO.
CV-05A	1	T10206-UC02-P0ECC50-623101
CV-05B	1	T10206-UC02-P0ECC50-623101

RECOMENDED OIL	SHELL
ISO 32 HM	TELLUS 32
OIL QUANTITY	47L
OIL POINT	2

REDUCER SIDE			MOTOR SIDE		
D1	B1	H1	D2	B2	H2
+0.035 0	±0.026	+0.2 0	+0.071 +0.036	±0.031	+0.2 0
ø100H7	28	106.4	ø120F7	32	127.4

GENERAL TOLERANCE (mm)	
0.5~3	±0.1
3~6	±0.1
6~30	±0.2
30~120	±0.3
120~400	±0.5
400~1000	±0.8
1000~2000	±1.2
2000~4000	±2

SURFACE ROUGHNESS Ra	Rmax	FINISH MARK
√		∼
25/	100S	▽
12.5/	50S	
6.3/	25S	▽▽
3.2/	12.5S	
1.6/	6.3S	▽▽▽
0.8/	3.2S	
0.2/	0.8S	▽▽▽▽
0.1/	0.4S	

CUSTOMER		SCALE	N/S
		PROJECTION	
TITLE	29 CKRB FLUID COUPLING	DWG.NO.	CKRB2900
		REF.NO.	
		REV. NO.	1
DRAWN	CHECKED	APPROVED	
J.A. KIM 2012.05.24		Y.D. SON 2012.05.24	NARA CORPORATION

FOR CONSTRUCTION

THIS DRAWING IS THE PROPERTY OF DOOSAN HEAVY INDUSTRIES & CONSTRUCTION CO., LTD.
IT IS NOT TO BE COPIED OR USED IN ANY WAY DETRIMENTAL TO THE COMPANY.

Rev.	Date	Prepared	Checked	Approved	Details of Revision
A	05.02.2013	ILSIN	Y.I.MIN	J.S.PARK	FOR CONSTRUCTION

Owner: AES-VCM MONG DUONG POWER COMPANY LIMITED

Consultant: POWER ENGINEERING CONSULTING JOINT STOCK COMPANY 2

Contractor: Doosan Heavy Industries & Construction Co., Ltd.

Project: MONG DUONG II 2x560MW(NET) COAL FIRED POWER PROJECT

Orig-Pc: T10206
PC: XW03
Type: ECC
Contents Code: P0

	Date	Name
Drawn	30.04.2012	ILSIN
Checked	30.04.2012	Y.I.MIN
Approved	30.04.2012	J.S.PARK
Dept.		

Scale: NONE

Title: COAL HANDLING SYSTEM BELT CONVEYOR CV-05A/B FLUID COUPLING ASSEMBLY (29CKRB)

Reg. No: 625025

Doosan Heavy Industries & Construction Co., Ltd.

Dept.

Unid

Rev.: 0

Version

Drawing No.: T10206-XW03-P0ECC00-625025

Page-No.: 1/1

A1 (841 x 594mm)

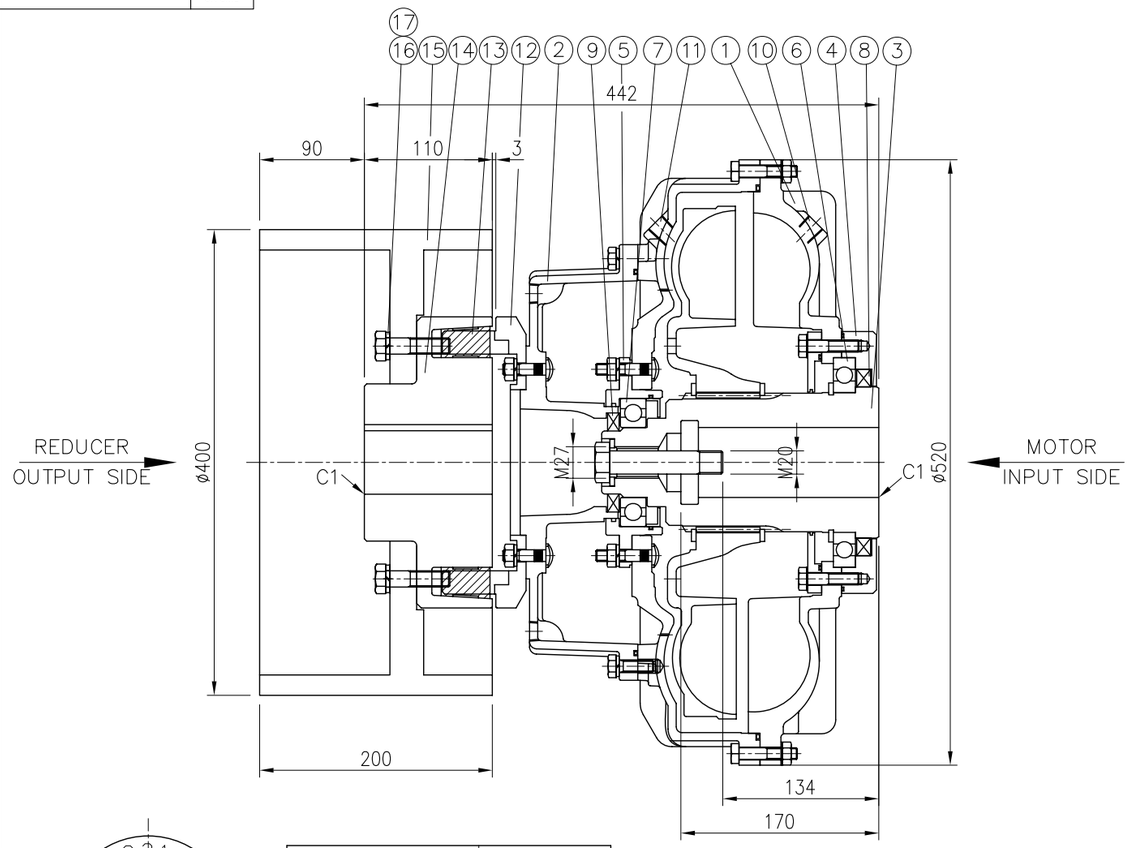

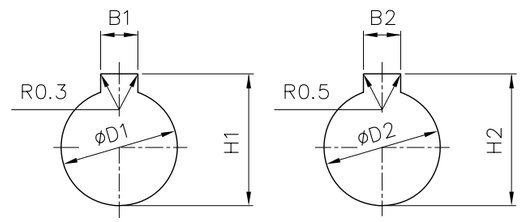

REDUCER SIDE
MAX.SHAFT DIA: ø90

MOTOR SIDE
MAX.SHAFT DIA: ø85

MARK	DATE	REVISION	REASON	SIGNATURE

NO.	DESCRIPTIONS	SIZE	MAT'L	Q'TY	WEIGHT (kgf)	REMARKS
17	SPRING WASHER	M14	HSWR62	8		
16	WRENCH BOLT	M14	12.9	8		
15	BRAKE DRUM	ø4000x200	GDC450	1		
14	BODY	ø250x110	GDC450	1		
13	RUBBER BLOCK	SF250	NBR	16		
12	SOCKET	ø250x72	GDC450	1		
11	PLUG	PT 3/8	PURCH.	1		
10	FUSIBLE PLUG	PT 3/8	PURCH.	1		
9	SEAL	54x85x10	VITON	1		
8	SEAL	130x160x12	VITON	1		
7	BALL BEARING	#6212	PURCH.	1		
6	BALL BEARING	#16024	PURCH.	1		
5	BEARING CARRIER	ø180x47	SM45C	1		
4	BEARING CARRIER	ø225x30	SM45C	1		
3	SHAFT	ø130x238	SM45C-H	1		
2	CHAMBER	17CK	AL.ALLOY	1		
1	CASE	17K	AL.ALLOY	1		

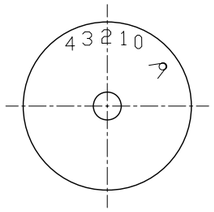

< OIL POINT >

RECOMENDED OIL	SHELL
ISO 32 HM	TELLUS 32
OIL QUANTITY	10 L
OIL POINT	2

REDUCER SIDE			MOTOR SIDE		
D1	B1	H1	D2	B2	H2
+0.030 0	±0.0215	+0.2 0	+0.071 +0.036	±0.0260	+0.2 0
ø55H7	16	59.3	ø85F7	22	90.4

GENERAL TOLERANCE (mm)		SURFACE ROUGHNESS Ra	Rmax	FINISH MARK
0.5~3	±0.1			
3~6	±0.1			
6~30	±0.2		100S	
30~120	±0.3		50S	
120~400	±0.5		25S	
400~1000	±0.8		12.5S	
1000~2000	±1.2		6.3S	
2000~4000	±2		3.2S	
			0.8S	
			0.4S	

CUSTOMER	STANDARD	SCALE	1/4
PROJECTION			
TITLE	17 CKRB FLUID COUPLING	DWG.NO.	CKRB1700
		REF.NO.	
		REV. NO.	1
DRAWN	CHECKED	APPROVED	
J.A. KIM 2012.05.24		Y.D. SON 2012.05.24	NARA CORPORATION

MFG. Q'TY : TOTAL = 2 SETS

ITEM NO.	Q'TY	REF. DWG. NO.
CV-06A	1	T10206-UC02-P0ECC60-623101
CV-06B	1	T10206-UC02-P0ECC60-623101

FOR CONSTRUCTION

THIS DRAWING IS THE PROPERTY OF DOOSAN HEAVY INDUSTRIES & CONSTRUCTION CO., LTD.
IT IS NOT TO BE COPIED OR USED IN ANY WAY DETRIMENTAL TO THE COMPANY.

Rev.	Date	Prepared	Checked	Approved	Details of Revision
0	05.02.2013	ILSIN	Y.I.MIN	J.S.PARK	FOR CONSTRUCTION

Owner: AES-VCM MONG DUONG POWER COMPANY LIMITED

Consultant: POWER ENGINEERING CONSULTING JOINT STOCK COMPANY 2

Contractor: Doosan Heavy Industries & Construction Co., Ltd.

Project: MONG DUONG II 2x560MW(NET) COAL FIRED POWER PROJECT

Orig-Pc: T10206
PC: XW03
Type: ECC
Contents Code: P0

	Date	Name
Drawn	30.04.2012	ILSIN
Checked	30.04.2012	Y.I.MIN
Approved	30.04.2012	J.S.PARK

Scale: NONE.

Title: COAL HANDLING SYSTEM BELT CONVEYOR CV-06A/B FLUID COUPLING ASSEMBLY (17CKRB)

Reg. No: 625026
Rev.: 0
Version:

Dept.: Doosan Heavy Industries & Construction Co., Ltd.

Drawing No.: T10206-XW03-P0ECC00-625026

Page-No.: 1/1

A1 (841 x 594mm)

MARK	DATE	REVISION	REASON	SIGNATURE

DWG.NO.

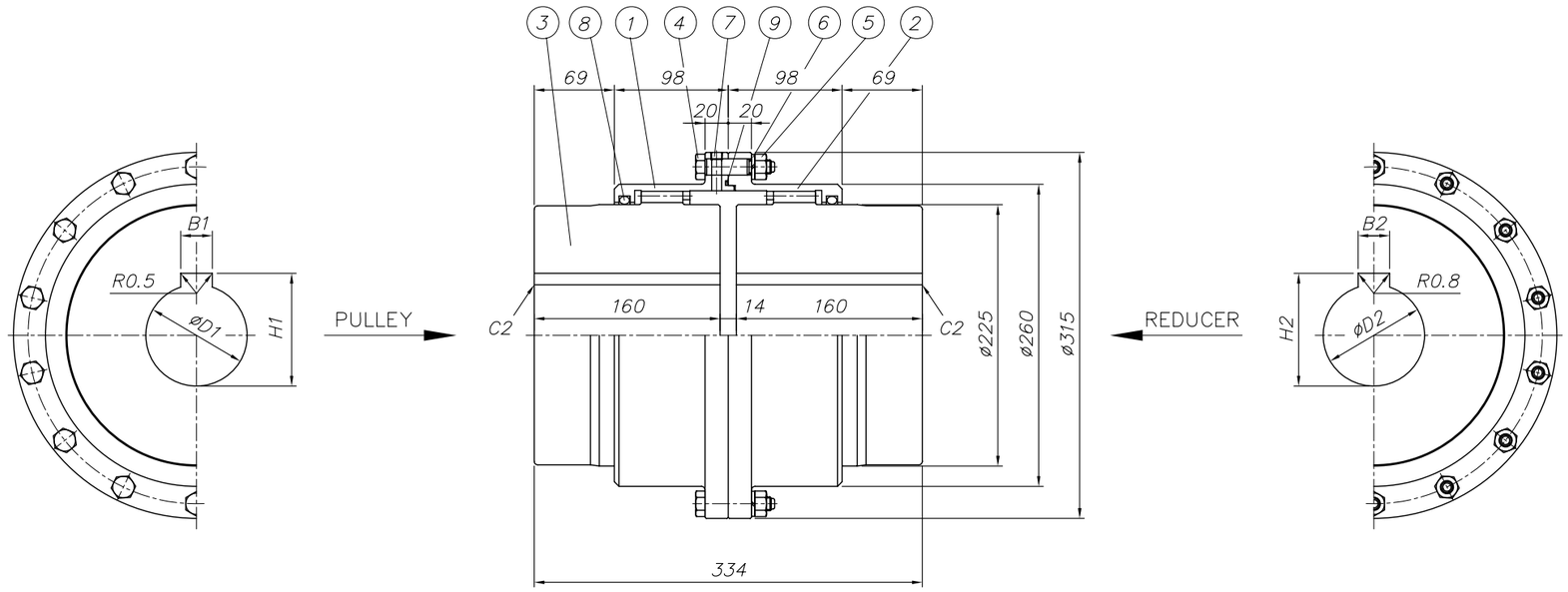

PULLEY SIDE			REDUCER SIDE		
D1	B1	H1	D2	B2	H2
$^{+0.035}_{0}$	±0.031	$^{+0.2}_{0}$	$^{+0.040}_{0}$	±0.031	$^{+0.2}_{0}$
ø115H7	32	122.4	ø140H7	36	148.4

SPECIFICATION					WEIGHT	SERVICE FACTOR	GREASE	ALIGNMENT TOLERANCE
HUB BORE(mm)		TYPE	LOAD CAPACITY					
MAX	MIN	SSM315	MAX. SPEED	BASIC TORQUE	123 kg	2.0	1000 gf	2.5 mm
160	100		3000 rpm	3680 kgf-m				

GENERAL TOLERANCE (mm)		SURFACE ROUGHNESS Ra	Rmax	FINISH MARK
0.5~3	±0.1	√		~
3~6	±0.1	25/	100S	▽
6~30	±0.2	12.5/	50S	
30~120	±0.3	6.3/	25S	▽▽
120~400	±0.5	3.2/	12.5S	
400~1000	±0.8	1.6/	6.3S	▽▽▽
1000~2000	±1.2	0.8/	3.2S	
2000~4000	±2	0.3/	0.8S	▽▽▽▽
		0.1/	0.4S	

NO.	DESCRIPTIONS	SIZE	MAT'L	Q'TY	WEIGHT (kgf)	REMARKS
9	CENTER O-RING	ø3xd258	NBR	1		
8	SIDE O-RING	P225	NBR	2		
7	PLUG	PT 1/8	PURCH.	2		
6	SPRING WASHER	M12	HSWR62	14		
5	NUT	M12	4T	14		
4	REAMER BOLT	M12xø14x60	SCM435	14		
3	HUB	ø248x160	SM45C-N	2		
2	SLEEVE-B	ø315x98	SM45C-N	1		
1	SLEEVE-A	ø315x103	SM45C-N	1		

CUSTOMER	STANDARD	SCALE	1/4	PROJECTION	
TITLE	SSM 315 GEAR COUPLING	DWG.NO.	SSM31500		REV. NO. 1
		REF.NO.			
DRAWN	CHECKED	APPROVED			
J.A. KIM 2012.05.24		Y.D. SON 2012.05.24	NARA CORPORATION		

MFG. Q'TY : TOTAL = 2 SETS

ITEM NO.	Q'TY	REF. DWG. NO.
CV-01A	1	T10206-UC02-P0ECC10-623101
CV-01B	1	T10206-UC02-P0ECC10-623101

FOR CONSTRUCTION

THIS DRAWING IS THE PROPERTY OF DOOSAN HEAVY INDUSTRIES & CONSTRUCTION CO., LTD.
IT IS NOT TO BE COPIED OR USED IN ANY WAY DETRIMENTAL TO THE COMPANY.

Rev.	Date	Prepared	Checked	Approved	Details of Revision
0	05.02.2013	ILSIN	Y.I.MIN	J.S.PARK	FOR CONSTRUCTION

Owner: AES-VCM MONG DUONG POWER COMPANY LIMITED

Consultant: POWER ENGINEERING CONSULTING JOINT STOCK COMPANY 2

Contractor: Doosan Heavy Industries & Construction Co., Ltd.

Project: MONG DUONG II 2x560MW(NET) COAL FIRED POWER PROJECT

	Date	Name
Drawn	30.04.2012	ILSIN
Checked	30.04.2012	Y.I.MIN
Approved	30.04.2012	J.S.PARK
Dept.		

Scale: NONE

Title: COAL HANDLING SYSTEM BELT CONVEYOR CV-01A/B GEAR COUPLING ASSEMBLY (SSM315)

Doosan Heavy Industries & Construction Co., Ltd. | Dept. | Unid

Drawing No. T10206-XW03-P0ECC00-625027

Orig-Pc T10206 | PC XW03 | Type ECC | Contents Code P0 | Reg. No 625027 | Rev. 0 | Version | Page-No. 1/1

A1 (841 x 594mm)

MARK	DATE	REVISION	REASON	SIGNATURE

DWG.NO.

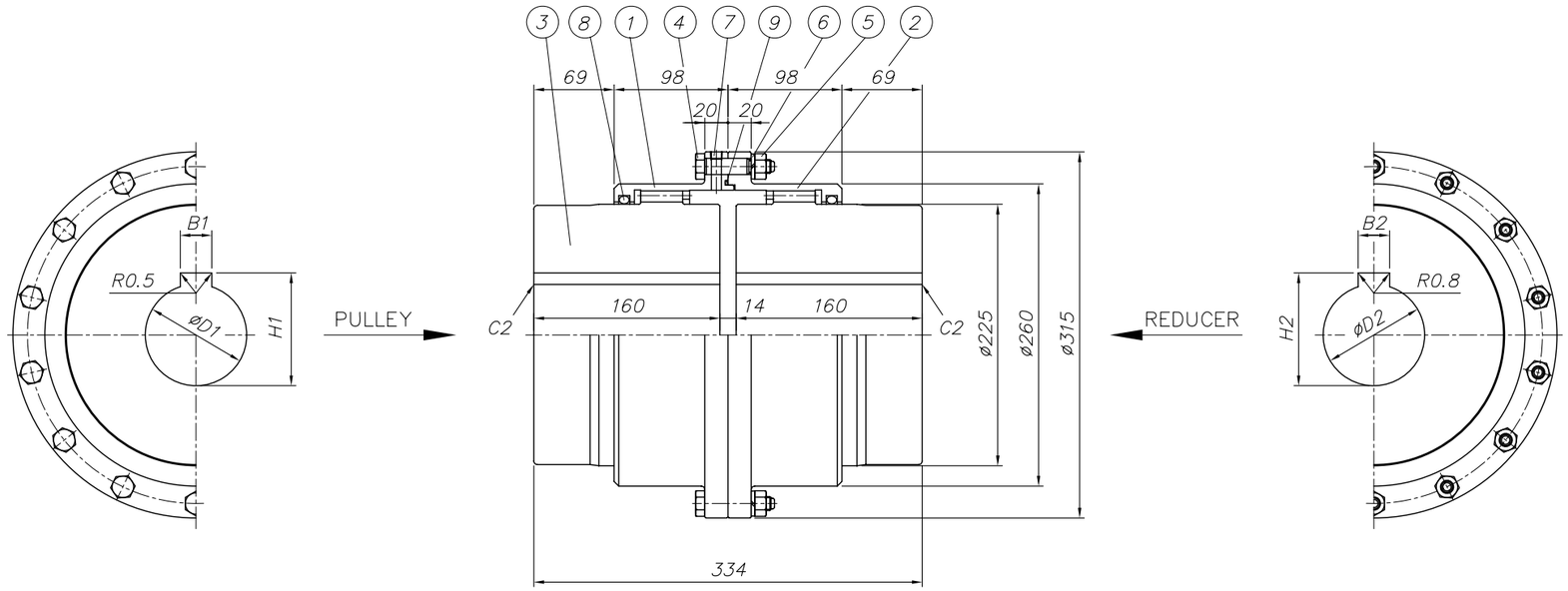

PULLEY SIDE			REDUCER SIDE		
D1	B1	H1	D2	B2	H2
$^{+0.035}_{0}$ ø115H7	±0.031 32	$^{+0.2}_{0}$ 122.4	$^{+0.040}_{0}$ ø140H7	±0.031 36	$^{+0.2}_{0}$ 148.4

SPECIFICATION					WEIGHT	SERVICE FACTOR	GREASE	ALIGNMENT TOLERANCE
HUB BORE(mm)		TYPE	LOAD CAPACITY					
MAX	MIN	SSM315	MAX. SPEED	BASIC TORQUE	123 kg	2.0	1000 gf	2.5 mm
160	100		3000 rpm	3680 kgf-m				

GENERAL TOLERANCE (mm)	
0.5~3	±0.1
3~6	±0.1
6~30	±0.2
30~120	±0.3
120~400	±0.5
400~1000	±0.8
1000~2000	±1.2
2000~4000	±2

SURFACE ROUGHNESS		
Ra	Rmax	FINISH MARK
√		~
25/	100S	▽
12.5/	50S	
6.3/	25S	▽▽
3.2/	12.5S	
1.6/	6.3S	▽▽▽
0.8/	3.2S	
0.4/	0.8S	▽▽▽▽
0.1/	0.4S	

NO.	DESCRIPTIONS	SIZE	MAT'L	Q'TY	WEIGHT (kgf)	REMARKS
9	CENTER O-RING	ø3xd258	NBR	1		
8	SIDE O-RING	P225	NBR	2		
7	PLUG	PT 1/8	PURCH.	2		
6	SPRING WASHER	M12	HSWR62	14		
5	NUT	M12	4T	14		
4	REAMER BOLT	M12xø14x60	SCM435	14		
3	HUB	ø248x160	SM45C-N	2		
2	SLEEVE-B	ø315x98	SM45C-N	1		
1	SLEEVE-A	ø315x103	SM45C-N	1		

CUSTOMER	STANDARD	SCALE	1/4
		PROJECTION	
TITLE	SSM 315 GEAR COUPLING	DWG.NO.	SSM31500
		REF.NO.	
		REV. NO.	1

DRAWN	CHECKED	APPROVED
J.A. KIM 2012.05.24		Y.D. SON 2012.05.24

NARA CORPORATION

MFG. Q'TY : TOTAL = 2 SETS

ITEM NO.	Q'TY	REF. DWG. NO.
CV-02A	1	T10206-UC02-P0ECC20-623101
CV-02B	1	T10206-UC02-P0ECC20-623101

FOR CONSTRUCTION

THIS DRAWING IS THE PROPERTY OF DOOSAN HEAVY INDUSTRIES & CONSTRUCTION CO., LTD.
IT IS NOT TO BE COPIED OR USED IN ANY WAY DETRIMENTAL TO THE COMPANY.

Rev.	Date	Prepared	Checked	Approved	Details of Revision
0	05.02.2013	ILSIN	Y.I.MIN	J.S.PARK	FOR CONSTRUCTION

Owner: AES-VCM MONG DUONG POWER COMPANY LIMITED

Consultant: POWER ENGINEERING CONSULTING JOINT STOCK COMPANY 2

Contractor: Doosan Heavy Industries & Construction Co., Ltd.

Project: MONG DUONG II 2x560MW(NET) COAL FIRED POWER PROJECT

Orig-Pc: T10206
PC: XW03
Type: ECC
Contents Code: P0

	Date	Name
Drawn	30.04.2012	ILSIN
Checked	30.04.2012	Y.I.MIN
Approved	30.04.2012	J.S.PARK

Scale: NONE

Title: COAL HANDLING SYSTEM BELT CONVEYOR CV-02A/B GEAR COUPLING ASSEMBLY (SSM315)

Dept.

Doosan Heavy Industries & Construction Co., Ltd. | Dept. | Unit

Reg. No: 625028
Rev.: 0
Version:

Drawing No.: T10206-XW03-P0ECC00-625028
Page-No.: 1/1

A1 (841 x 594mm)

MARK	DATE	REVISION	REASON	SIGNATURE

DWG.NO.

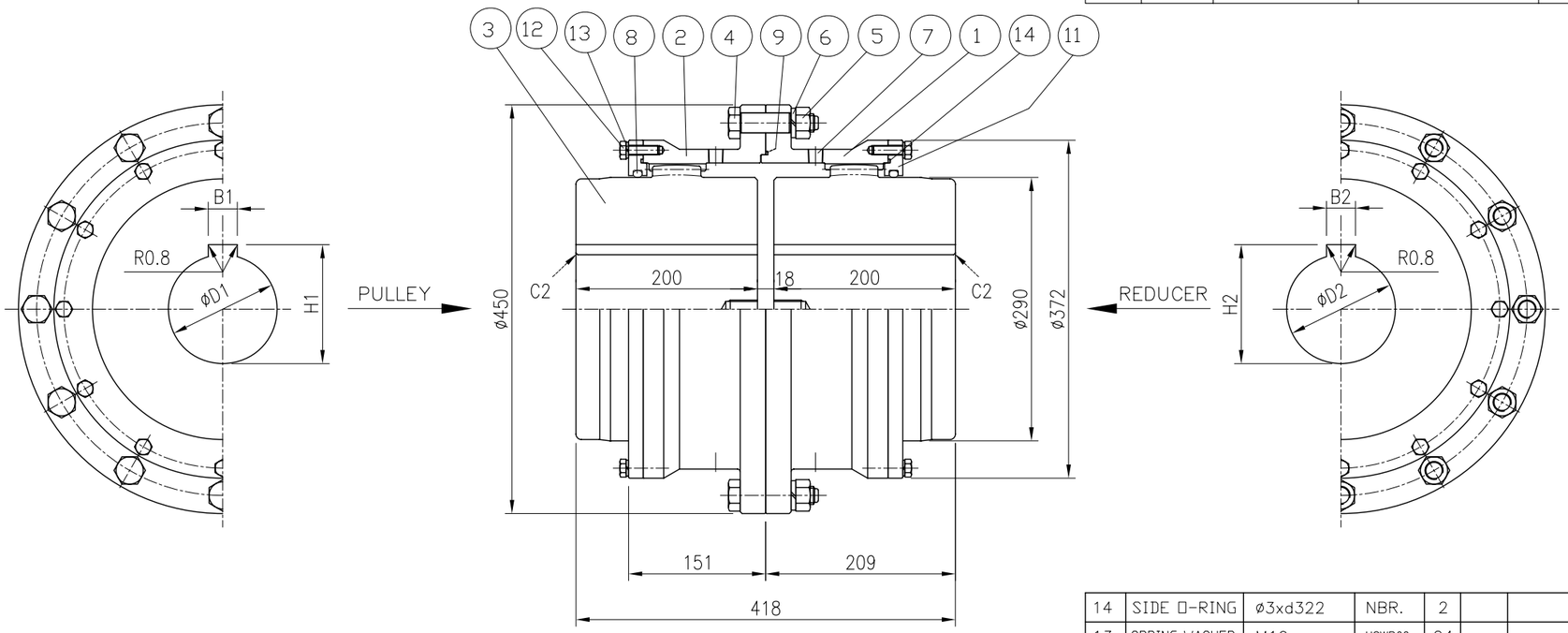

PULLEY SIDE			REDUCER SIDE		
D1	B1	H1	D2	B2	H2
+0.040 0	±0.031	+0.3 0	+0.040 0	±0.031	+0.3 0
ø140H7	36	148.4	ø170H7	40	179.4

SPECIFICATION					WEIGHT	SERVICE FACTOR	GREASE	ALIGNMENT TOLERANCE
HUB BORE(mm)		TYPE	LOAD CAPACITY					
MAX	MIN	CCM450	MAX. SPEED	BASIC TORQUE	298 kg	2.0	2300 gf	3.0 mm
205	140		2100 rpm	9500 kgf-m				

GENERAL TOLERANCE (mm)	
0.5~3	±0.1
3~6	±0.1
6~30	±0.2
30~120	±0.3
120~400	±0.5
400~1000	±0.8
1000~2000	±1.2
2000~4000	±2

SURFACE ROUGHNESS		
Ra	Rmax	FINISH MARK
√		~
25/ √	100S	▽
12.5/ √	50S	
6.3/ √	25S	▽▽
3.2/ √	12.5S	
1.6/ √	6.3S	▽▽▽
0.8/ √	3.2S	
0.2/ √	0.8S	▽▽▽▽
0.1/ √	0.4S	

NO.	DESCRIPTIONS	SIZE	MAT'L	Q'TY	WEIGHT (kgf)	REMARKS
14	SIDE O-RING	ø3xd322	NBR.	2		
13	SPRING WASHER	M10	HSWR62	24		
12	HEX' BOLT	M10x35L	4.6	24		
11	SIDE COVER	ø372x20	SS400	2		
9	CENTER O-RING	ø3xd340	NBR.	1		
8	SIDE O-RING	ø9	NBR.	2		
7	PLUG	PT 3/8	PURCH.	4		
6	SPRING WASHER	M20	HSWR62	12		
5	NUT	M20	4T	12		
4	REAMER BOLT	M20xø22x86L	SCM435	12		
3	HUB	ø320x200	SM45C-N	2		
2	SLEEVE-B	ø450x135	SM45C-N	1		
1	SLEEVE-A	ø450x140	SM45C-N	1		

CUSTOMER	STANDARD	SCALE	1/5	PROJECTION
TITLE	CCM 450 GEAR COUPLING	DWG.NO.	CCM045000	REV. NO. 1
		REF.NO.		

DRAWN	CHECKED	APPROVED
J.A. KIM 2012.05.24		Y.D. SON 2012.05.24

NARA CORPORATION

MFG. Q'TY : TOTAL = 2 SETS

ITEM NO.	Q'TY	REF. DWG. NO.
CV-03A	1	T10206-UC02-P0ECC31-623101
CV-03B	1	T10206-UC02-P0ECC31-623101

FOR CONSTRUCTION

THIS DRAWING IS THE PROPERTY OF DOOSAN HEAVY INDUSTRIES & CONSTRUCTION CO., LTD.
IT IS NOT TO BE COPIED OR USED IN ANY WAY DETRIMENTAL TO THE COMPANY.

Rev.	Date	Prepared	Checked	Approved	Details of Revision
0	05.02.2013	ILSIN	Y.I.MIN	J.S.PARK	FOR CONSTRUCTION

Owner: AES-VCM MONG DUONG POWER COMPANY LIMITED

Consultant: POWER ENGINEERING CONSULTING JOINT STOCK COMPANY 2

Contractor: Doosan Heavy Industries & Construction Co., Ltd.

Project: MONG DUONG II 2x560MW(NET) COAL FIRED POWER PROJECT

Orig-Pc: T10206
PC: XW03

	Date	Name
Drawn	30.04.2012	ILSIN
Checked	30.04.2012	Y.I.MIN
Approved	30.04.2012	J.S.PARK
Dept.		

Scale: NONE

Title: COAL HANDLING SYSTEM
BELT CONVEYOR CV-03A/B
FLUID COUPLING ASSEMBLY
(CCM450)

Type: ECC
Contents Code: P0
Reg. No: 625029
Rev.: 0
Version:
Dept.:
Unit:
Doosan Heavy Industries & Construction Co., Ltd.
Drawing No.: T10206-XW03-P0ECC00-625029
Page-No.: 1/1

A1 (841 x 594mm)

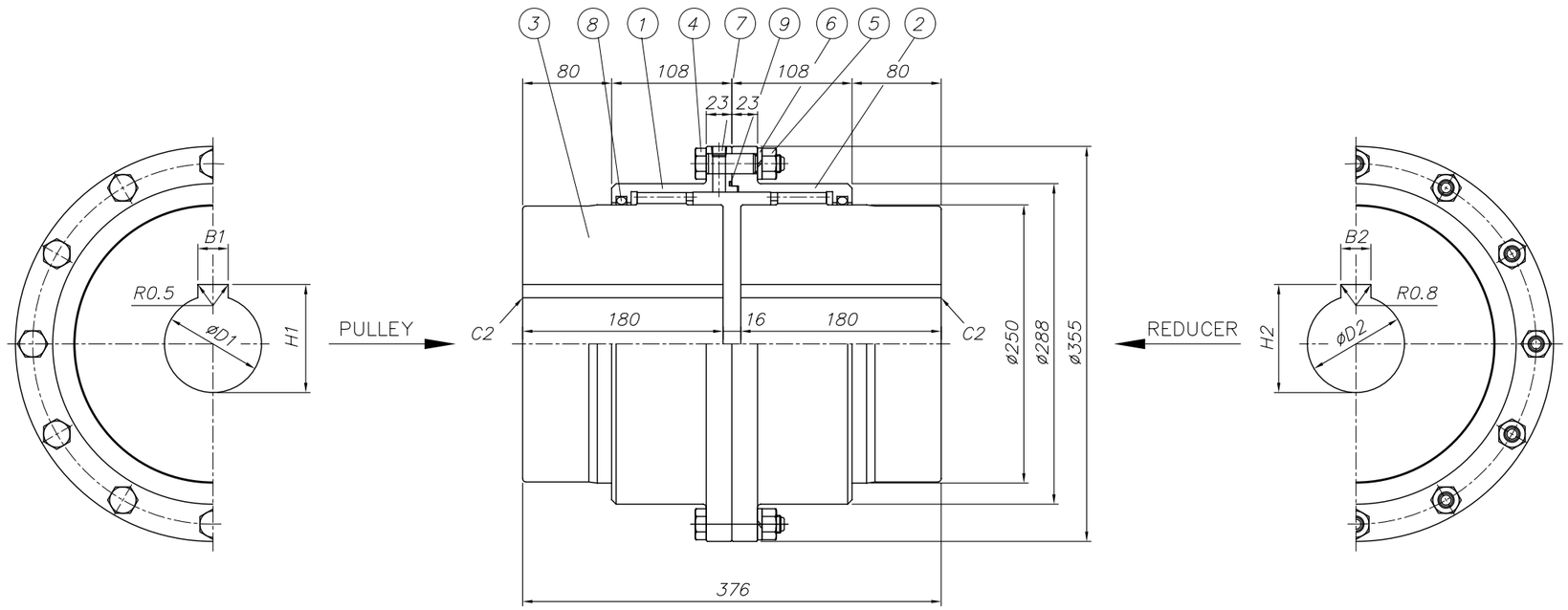

PULLEY SIDE			REDUCER SIDE		
D1	B1	H1	D2	B2	H2
$^{+0.040}_{0}$ Ø125H7	±0.031	$^{+0.2}_{0}$ 132.4	$^{+0.040}_{0}$ Ø140H7	±0.031	$^{+0.2}_{0}$ 148.4

SPECIFICATION					WEIGHT	SERVICE FACTOR	GREASE	ALIGNMENT TOLERANCE
HUB BORE(mm)		TYPE	LOAD CAPACITY					
MAX	MIN	SSM355	MAX. SPEED	BASIC TORQUE	169 kg	2.0	1200 gf	3.0 mm
180	125		2600 rpm	5550 kgf-m				

GENERAL TOLERANCE (mm)	
0.5~3	±0.1
3~6	±0.1
6~30	±0.2
30~120	±0.3
120~400	±0.5
400~1000	±0.8
1000~2000	±1.2
2000~4000	±2

SURFACE ROUGHNESS		
Ra	Rmax	FINISH MARK
√		∿
25/√	100S	▽
12.5/√	50S	
6.3/√	25S	▽▽
3.2/√	12.5S	
1.6/√	6.3S	▽▽▽
0.8/√	3.2S	
0.2/√	0.8S	▽▽▽▽
0.1/√	0.4S	

MARK	DATE	REVISION	REASON	SIGNATURE

NO.	DESCRIPTIONS	SIZE	MAT'L	Q'TY	WEIGHT (kgf)	REMARKS
9	CENTER O-RING	ø3xd284	NBR	1		
8	SIDE O-RING	P250	NBR	2		
7	PLUG	PT 1/4	PURCH.	2		
6	SPRING WASHER	M16	HSWR62	12		
5	NUT	M16	4T	12		
4	REAMER BOLT	M16xø18x70	SCM435	12		
3	HUB	ø272x180	SM45C-N	2		
2	SLEEVE-B	ø355x108	SM45C-N	1		
1	SLEEVE-A	ø355x113	SM45C-N	1		

CUSTOMER	STANDARD	SCALE	1/4	PROJECTION	
TITLE	SSM 355 GEAR COUPLING	DWG.NO.	SSM35500	REV. NO.	1
		REF.NO.			
DRAWN	CHECKED	APPROVED			
J.A. KIM 2012.05.24		Y.D. SON 2012.05.24	NARA CORPORATION		

MFG. Q'TY : TOTAL = 2 SETS

ITEM NO.	Q'TY	REF. DWG. NO.
CV-04A	1	T10206-UC02-P0ECC40-623101
CV-04B	1	T10206-UC02-P0ECC40-623101

FOR CONSTRUCTION

THIS DRAWING IS THE PROPERTY OF DOOSAN HEAVY INDUSTRIES & CONSTRUCTION CO., LTD.
IT IS NOT TO BE COPIED OR USED IN ANY WAY DETRIMENTAL TO THE COMPANY.

Rev.	Date	Prepared	Checked	Approved	Details of Revision
1	05.02.2013	ILSIN	Y.I.MIN	J.S.PARK	FOR CONSTRUCTION

Owner: AES-VCM MONG DUONG POWER COMPANY LIMITED

Consultant: POWER ENGINEERING CONSULTING JOINT STOCK COMPANY 2

Contractor: Doosan Heavy Industries & Construction Co., Ltd.

Project: MONG DUONG II 2x560MW(NET) COAL FIRED POWER PROJECT

	Date	Name
Drawn	30.04.2012	ILSIN
Checked	30.04.2012	Y.I.MIN
Approved	30.04.2012	J.S.PARK
Dept.		

Scale: NONE

Title: COAL HANDLING SYSTEM BELT CONVEYOR CV-04A/B GEAR COUPLING ASSEMBLY (SSM355)

Orig-Pc: T10206
PC: XW03
Type: ECC
Contents Code: P0
Reg. No: 625030
Rev.: 0
Version:
Dept.:
Unit:
Doosan Heavy Industries & Construction Co., Ltd.
Drawing No.: T10206-XW03-P0ECC00-625030
Page-No.: 1/1

A1 (841 x 594mm)

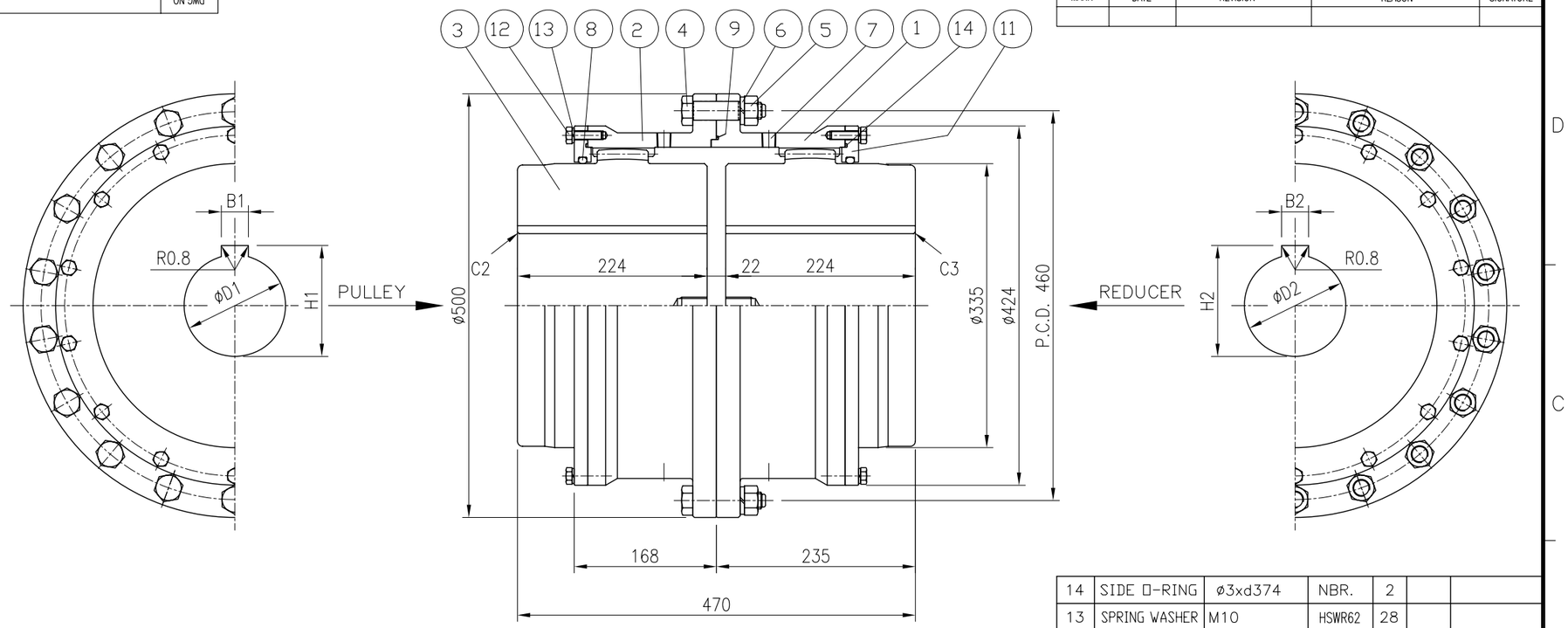

MARK	DATE	REVISION	REASON	SIGNATURE

DWG.NO.

NO.	DESCRIPTIONS	SIZE	MAT'L	Q'TY	WEIGHT (kgf)	REMARKS
14	SIDE O-RING	Ø3xd374	NBR.	2		
13	SPRING WASHER	M10	HSWR62	28		
12	HEX' BOLT	M10x35L	4.6	28		
11	SIDE COVER	Ø424x20	SS400	2		
9	CENTER O-RING	Ø3xd392	NBR.	1		
8	SIDE O-RING	Ø9	NBR.	2		
7	PLUG	PT 3/8	PURCH.	4		
6	SPRING WASHER	M20	HSWR62	18		
5	NUT	M20	4T	18		
4	REAMER BOLT	M20xØ22x86L	SCM435	18		
3	HUB	Ø372x224	SM45C-N	2		
2	SLEEVE-B	Ø500x152	SM45C-N	1		
1	SLEEVE-A	Ø500x158	SM45C-N	1		

PULLEY SIDE			REDUCER SIDE		
D1	B1	H1	D2	B2	H2
$^{+0.040}_{0}$	±0.031	$^{+0.3}_{0}$	$^{+0.046}_{0}$	±0.031	$^{+0.3}_{0}$
Ø170H7	40	179.4	Ø220H7	50	231.4

SPECIFICATION					WEIGHT	SERVICE FACTOR	GREASE	ALIGNMENT TOLERANCE
HUB BORE(mm)		TYPE	LOAD CAPACITY					
MAX	MIN	CCM500	MAX. SPEED	BASIC TORQUE	429 kg	2.0	3500 gf	3.5 mm
236	170		1900 rpm	13000 kgf-m				

GENERAL TOLERANCE (mm)	
0.5~3	±0.1
3~6	±0.1
6~30	±0.2
30~120	±0.3
120~400	±0.5
400~1000	±0.8
1000~2000	±1.2
2000~4000	±2

SURFACE ROUGHNESS		
Ra	Rmax	FINISH MARK
√		~
25/	100S	▽
12.5/	50S	
6.3/	25S	▽▽
3.2/	12.5S	
1.6/	6.3S	▽▽▽
0.8/	3.2S	
0.2/	0.8S	▽▽▽▽
0.1/	0.4S	

CUSTOMER	STANDARD	SCALE	1/5
PROJECTION			
TITLE	CCM 500 GEAR COUPLING	DWG.NO.	CCM050000
		REF.NO.	
		REV. NO.	1
DRAWN	CHECKED	APPROVED	
J.A. KIM 2012.05.24		Y.D. SON 2012.05.24	NARA CORPORATION

MFG. Q'TY : TOTAL = 2 SETS

ITEM NO.	Q'TY	REF. DWG. NO.
CV-05A	1	T10206-UC02-P0ECC50-623101
CV-05B	1	T10206-UC02-P0ECC50-623101

FOR CONSTRUCTION

THIS DRAWING IS THE PROPERTY OF DOOSAN HEAVY INDUSTRIES & CONSTRUCTION CO., LTD.
IT IS NOT TO BE COPIED OR USED IN ANY WAY DETRIMENTAL TO THE COMPANY.

Rev.	Date	Prepared	Checked	Approved	Details of Revision
0	05.02.2013	ILSIN	Y.I.MIN	J.S.PARK	FOR CONSTRUCTION

Owner: AES-VCM MONG DUONG POWER COMPANY LIMITED

Consultant: POWER ENGINEERING CONSULTING JOINT STOCK COMPANY 2

Contractor: Doosan Heavy Industries & Construction Co., Ltd.

Project: MONG DUONG II 2x560MW(NET) COAL FIRED POWER PROJECT

	Date	Name
Drawn	30.04.2012	ILSIN
Checked	30.04.2012	Y.I.MIN
Approved	30.04.2012	J.S.PARK

Scale: NONE

Title: COAL HANDLING SYSTEM BELT CONVEYOR CV-05A/B FLUID COUPLING ASSEMBLY (CCM500)

Dept.: Doosan Heavy Industries & Construction Co., Ltd.

Drawing No.: T10206-XW03-P0ECC00-625031

Orig-Pc: T10206
PC: XW03
Type: ECC
Contents Code: P0
Reg. No: 625031
Rev.: 0
Version:
Page-No.: 1/1

A1 (841 x 594mm)

MARK	DATE	REVISION	REASON	SIGNATURE

DWG.NO.

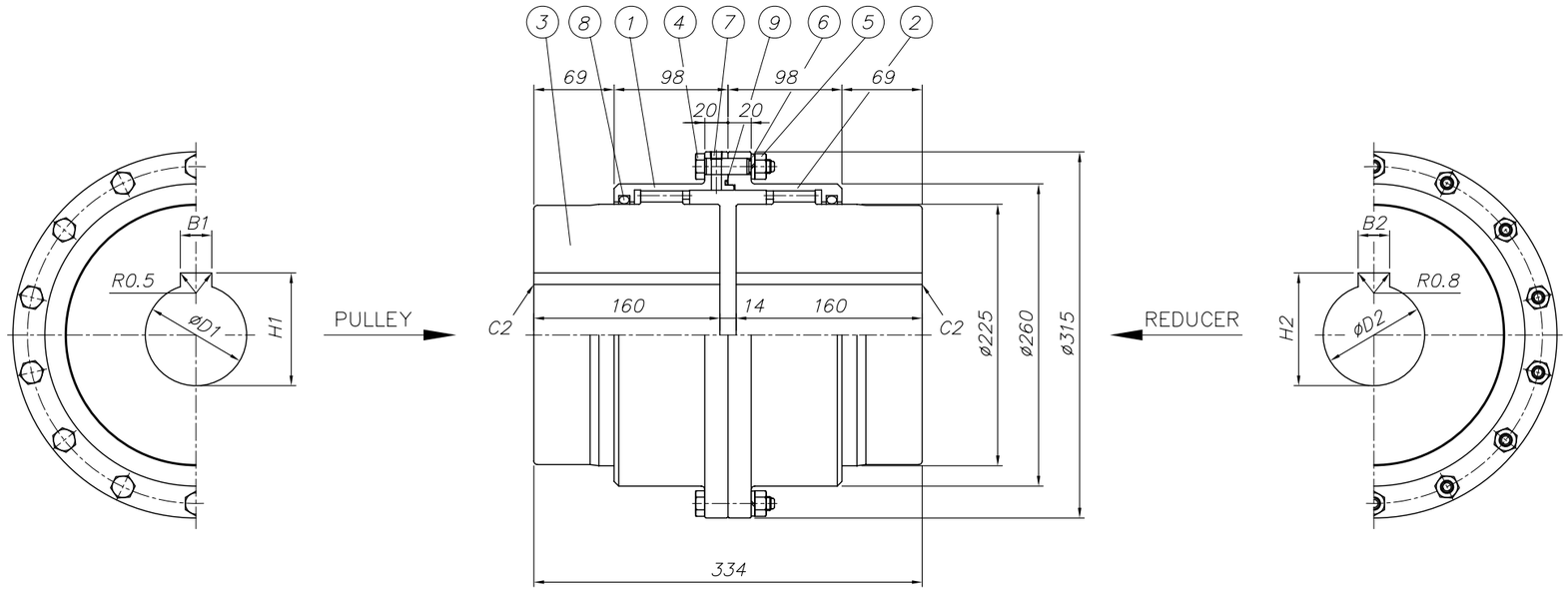

PULLEY SIDE			REDUCER SIDE		
D1	B1	H1	D2	B2	H2
$^{+0.035}_{0}$	±0.031	$^{+0.2}_{0}$	$^{+0.035}_{0}$	±0.031	$^{+0.2}_{0}$
ø115H7	32	122.4	ø120H7	32	127.4

SPECIFICATION					WEIGHT	SERVICE FACTOR	GREASE	ALIGNMENT TOLERANCE
HUB BORE(mm)		TYPE	LOAD CAPACITY					
MAX	MIN	SSM315	MAX. SPEED	BASIC TORQUE	123 kg	2.0	1000 gf	2.5 mm
160	100		3000 rpm	3680 kgf-m				

GENERAL TOLERANCE (mm)	
0.5~3	±0.1
3~6	±0.1
6~30	±0.2
30~120	±0.3
120~400	±0.5
400~1000	±0.8
1000~2000	±1.2
2000~4000	±2

SURFACE ROUGHNESS		
Ra	Rmax	FINISH MARK
√		~
25/	100S	▽
12.5/	50S	
6.3/	25S	▽▽
3.2/	12.5S	
1.6/	6.3S	▽▽▽
0.8/	3.2S	
0.4/	0.8S	▽▽▽▽
0.1/	0.4S	

NO.	DESCRIPTIONS	SIZE	MAT'L	Q'TY	WEIGHT (kgf)	REMARKS
9	CENTER O-RING	ø3xd258	NBR	1		
8	SIDE O-RING	P225	NBR	2		
7	PLUG	PT 1/8	PURCH.	2		
6	SPRING WASHER	M12	HSWR62	14		
5	NUT	M12	4T	14		
4	REAMER BOLT	M12xø14x60	SCM435	14		
3	HUB	ø248x160	SM45C-N	2		
2	SLEEVE-B	ø315x98	SM45C-N	1		
1	SLEEVE-A	ø315x103	SM45C-N	1		

CUSTOMER	STANDARD	SCALE	1/4	PROJECTION	
TITLE	SSM 315 GEAR COUPLING	DWG.NO.	SSM31500		REV. NO. 1
		REF.NO.			
DRAWN	CHECKED	APPROVED			
J.A. KIM 2012.05.24		Y.D. SON 2012.05.24	NARA CORPORATION		

MFG. Q'TY : TOTAL = 2 SETS

ITEM NO.	Q'TY	REF. DWG. NO.
CV-06A	1	T10206-UC02-P0ECC60-623101
CV-06B	1	T10206-UC02-P0ECC60-623101

FOR CONSTRUCTION

THIS DRAWING IS THE PROPERTY OF DOOSAN HEAVY INDUSTRIES & CONSTRUCTION CO., LTD.
IT IS NOT TO BE COPIED OR USED IN ANY WAY DETRIMENTAL TO THE COMPANY.

Rev.	Date	Prepared	Checked	Approved	Details of Revision
1	05.02.2013	ILSIN	Y.I.MIN	J.S.PARK	FOR CONSTRUCTION

Owner: AES-VCM MONG DUONG POWER COMPANY LIMITED

Consultant: POWER ENGINEERING CONSULTING JOINT STOCK COMPANY 2

Contractor: Doosan Heavy Industries & Construction Co., Ltd.

Project: MONG DUONG II 2x560MW(NET) COAL FIRED POWER PROJECT

Orig-Pc: T10206
PC: XW03
Type: ECC
Contents Code: P0

	Date	Name
Drawn	30.04.2012	ILSIN
Checked	30.04.2012	Y.I.MIN
Approved	30.04.2012	J.S.PARK

Scale: NONE

Title: COAL HANDLING SYSTEM BELT CONVEYOR CV-06A/B GEAR COUPLING ASSEMBLY (SSM315)

Reg. No: 625032

Doosan Heavy Industries & Construction Co., Ltd. | Dept. | Unit | Rev. 0 | Version

Drawing No. T10206-XW03-P0ECC00-625032 | Page-No. 1/1

A1 (841 x 594mm)

MARK	DATE	REVISION	REASON	SIGNATURE

DWG.NO.

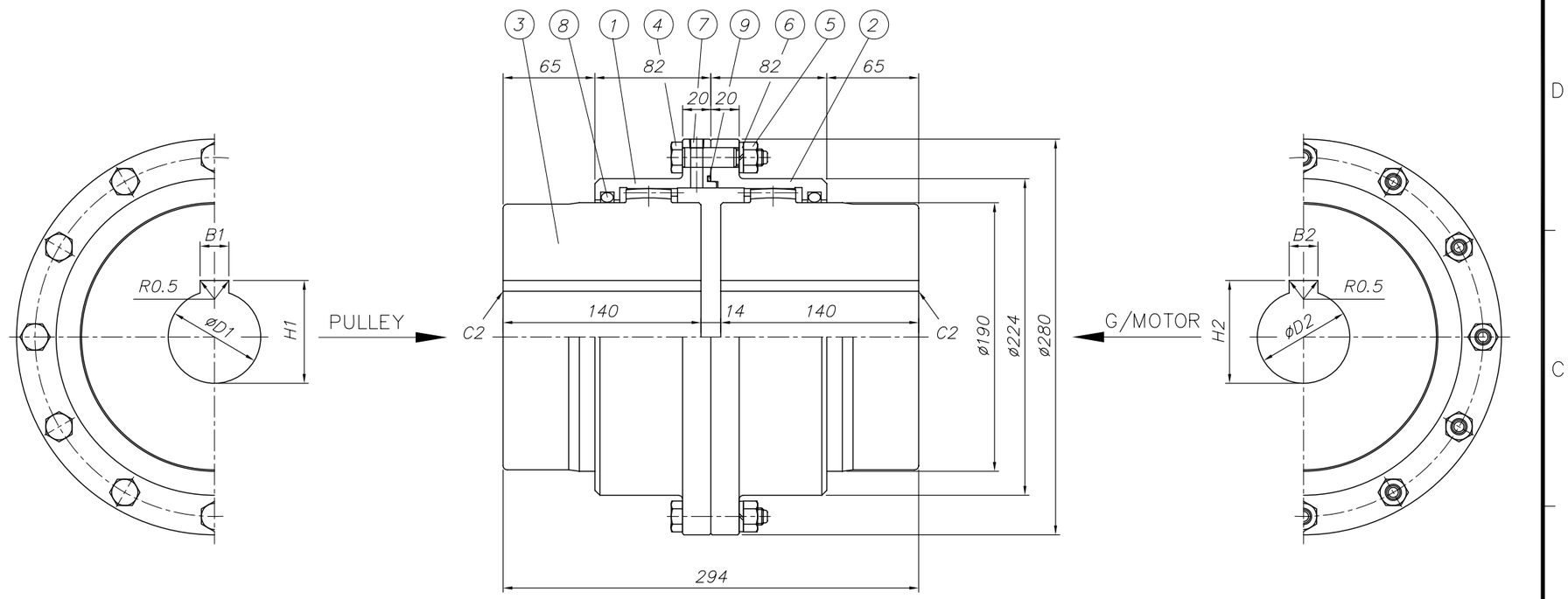

PULLEY SIDE			G/MOTOR SIDE		
D1	B1	H1	D2	B2	H2
$^{+0.035}_{0}$ Ø100H7	±0.026 28	$^{+0.2}_{0}$ 106.4	$^{+0.035}_{0}$ Ø90H7	±0.026 25	$^{+0.2}_{0}$ 95.4

SPECIFICATION					WEIGHT	SERVICE FACTOR	GREASE	ALIGNMENT TOLERANCE
HUB BORE(mm)		TYPE	LOAD CAPACITY					
MAX	MIN	SSM280	MAX. SPEED	BASIC TORQUE	81 kg	2.0	620 gf	2.0 mm
135	42		3400 rpm	2340 kgf-m				

GENERAL TOLERANCE (mm)	
0.5~3	±0.1
3~6	±0.1
6~30	±0.2
30~120	±0.3
120~400	±0.5
400~1000	±0.8
1000~2000	±1.2
2000~4000	±2

SURFACE ROUGHNESS		
Ra	Rmax	FINISH MARK
√		~
25/	100S	▽
12.5/	50S	
6.3/	25S	▽▽
3.2/	12.5S	
1.6/	6.3S	▽▽▽
0.8/	3.2S	
0.2/	0.8S	▽▽▽▽
0.1/	0.4S	

NO.	DESCRIPTIONS	SIZE	MAT'L	Q'TY	WEIGHT (kgf)	REMARKS
9	CENTER O-RING	ø3xd220	NBR	1		
8	SIDE O-RING	P190	NBR	2		
7	PLUG	PT 1/8	PURCH.	2		
6	SPRING WASHER	M12	HSWR62	12		
5	NUT	M12	4T	12		
4	REAMER BOLT	M12xø14x60	SCM435	12		
3	HUB	ø210x140	SM45C-N	2		
2	SLEEVE-B	ø280x82	SM45C-N	1		
1	SLEEVE-A	ø280x86	SM45C-N	1		

CUSTOMER	STANDARD	SCALE	1/3	PROJECTION
TITLE	SSM 280 GEAR COUPLING	DWG.NO.	SSM28000	REV. NO. 1
		REF.NO.		

DRAWN	CHECKED	APPROVED
J.A. KIM 2012.05.24		Y.D. SON 2012.05.24

NARA CORPORATION

MFG. Q'TY : TOTAL = 2 SETS

ITEM NO.	Q'TY	REF. DWG. NO.
CF-01A	1	T10206-UC02-P0ECC70-623101
CF-01B	1	T10206-UC02-P0ECC70-623101

FOR CONSTRUCTION

THIS DRAWING IS THE PROPERTY OF DOOSAN HEAVY INDUSTRIES & CONSTRUCTION CO., LTD.
IT IS NOT TO BE COPIED OR USED IN ANY WAY DETRIMENTAL TO THE COMPANY.

Rev.	Date	Prepared	Checked	Approved	Details of Revision
0	05.02.2013	ILSIN	Y.I.MIN	J.S.PARK	FOR CONSTRUCTION

Owner: AES-VCM MONG DUONG POWER COMPANY LIMITED

Consultant: POWER ENGINEERING CONSULTING JOINT STOCK COMPANY 2

Contractor: Doosan Heavy Industries & Construction Co., Ltd.

Project: MONG DUONG II 2x560MW(NET) COAL FIRED POWER PROJECT

Orig-Pc: T10206
PC: XW03
Type: ECC
Contents Code: P0

	Date	Name
Drawn	30.04.2012	ILSIN
Checked	30.04.2012	Y.I.MIN
Approved	30.04.2012	J.S.PARK

Scale: NONE

Title: COAL HANDLING SYSTEM BELT CONVEYOR CF-01A/B GEAR COUPLING ASSEMBLY (SSM280)

Reg. No: 625033

Dept.: Doosan Heavy Industries & Construction Co., Ltd.

Rev.: 0 Version:

Drawing No.: T10206-XW03-P0ECC00-625033

Page-No.: 1/1

A1 (841 x 594mm)

4. CONVEYOR BRAKE

A0 (841 x 1189mm)

DRAWING LIST

NO	DWG. NO	DWG. TITLE	REVISION						REMARK	NO	DWG. NO	DWG. TITLE	REVISION						REMARK
			0	1	2	3	4	5					0	1	2	3	4	5	
1	T10206-XW03-P0ECC00-625051	COAL HANDLING SYSTEM BELT CONVEYOR BREAK ASSEMBLY (HKB-HT315)	2013-02-05																
2	T10206-XW03-P0ECC00-625052	COAL HANDLING SYSTEM BELT CONVEYOR BREAK ASSEMBLY (HKB-HT527)	2013-02-05																
3	T10206-XW03-P0ECC00-625053	COAL HANDLING SYSTEM BELT CONVEYOR BREAK ASSEMBLY (HKB-HT280)	2013-02-05																

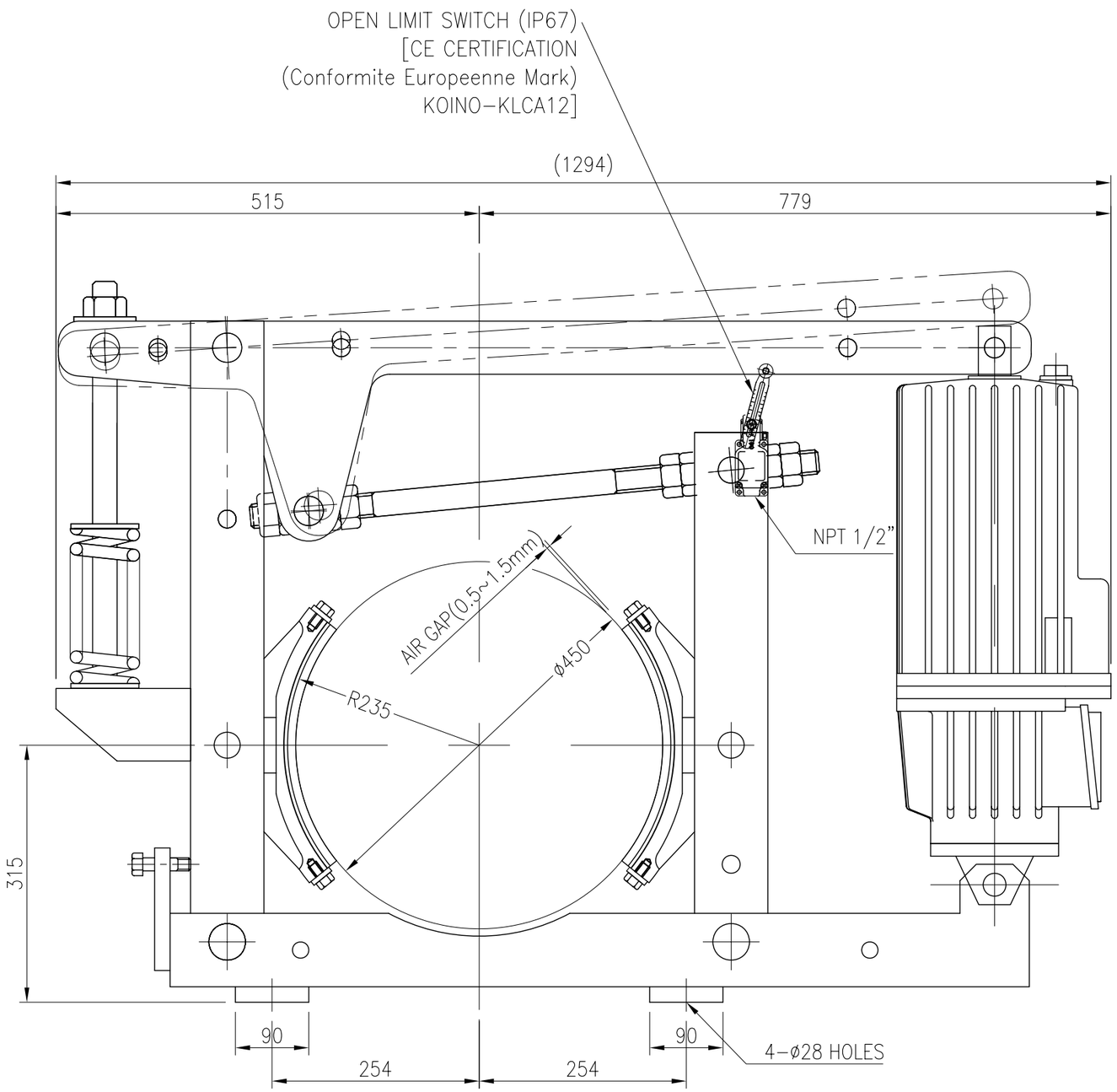

NOTE
1. RATING : 60%ED
2. INSULATION CLASS OF THRUSTOR COIL : "F" CLASS
3. PAINTING COLOR : RAL NO. 7035 200μm
4. SUPPLY SOURCE : AC 400V 3PH 50Hz
5. TORQUE : 180kg-m
6. OPEN LIMIT SWITCH (IP67)
7. LUBRICATION OIL : KSC2301 NO2
8. TOTAL Q'TY : 8 SETS

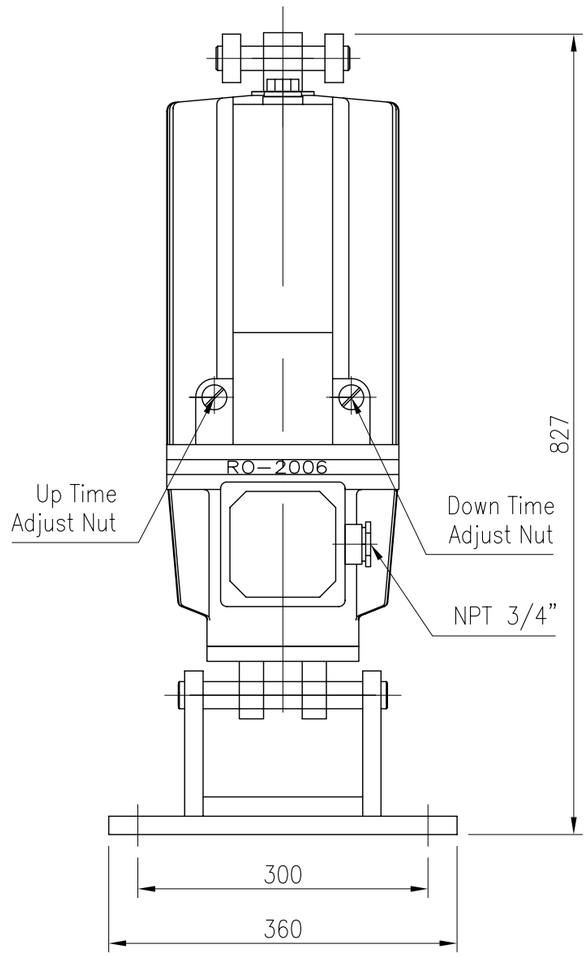

ITEM NO.	Q'TY	SPECIFICATION
CV-01A/B	2	HKB-HT315
CV-02A/B	2	HKB-HT315
CV-03A/B	2	HKB-HT315
CV-04A/B	2	HKB-HT315

FOR CONSTRUCTION

THIS DRAWING IS THE PROPERTY OF DOOSAN HEAVY INDUSTRIES & CONSTRUCTION CO., LTD.
IT IS NOT TO BE COPIED OR USED IN ANY WAY DETRIMENTAL TO THE COMPANY.

Rev.	Date	Prepared	Checked	Approved	Details of Revision
1	05.02.2013	ILSIN	Y.I.MIN	J.S.PARK	FOR CONSTRUCTION

Owner: AES-VCM MONG DUONG POWER COMPANY LIMITED

Consultant: POWER ENGINEERING CONSULTING JOINT STOCK COMPANY 2

Contractor: Doosan Heavy Industries & Construction Co., Ltd.

Project: MONG DUONG II 2x560MW(NET) COAL FIRED POWER PROJECT

Pc: T10206
UAS: XW03
KKS: ECC

	Date	Name
Drawn	05.10.2011	IL.SIN
Checked	05.10.2011	Y.I.MIN
Approved	05.10.2011	J.S.PARK
Dept.		

Scale: NONE

Title: COAL HANDLING SYSTEM BELT CONVEYOR BRAKE ASSEMBLY

Unit Code: P0

Reg. No: 625051

Rev.: 0 Version:

Doosan Heavy Industries & Construction Co., Ltd. Dept. Unid

Drawing No.: T10206-XW03-P0ECC00-625051

Page-No. 1/1

A0 (841 x 1189mm)

NOTE
1. RATING : 60%ED
2. INSULATION CLASS OF THRUSTOR COIL : "F" CLASS
3. PAINTING COLOR : RAL NO. 7035 200μm
4. SUPPLY SOURCE : AC400 3PH 50Hz
5. TORQUE : 660kg-m
6. OPEN LIMIT SWITCH (IP67)
7. LUBRICATION OIL : KSC2301 NO2
8. TOTAL Q'TY : 2 SETS

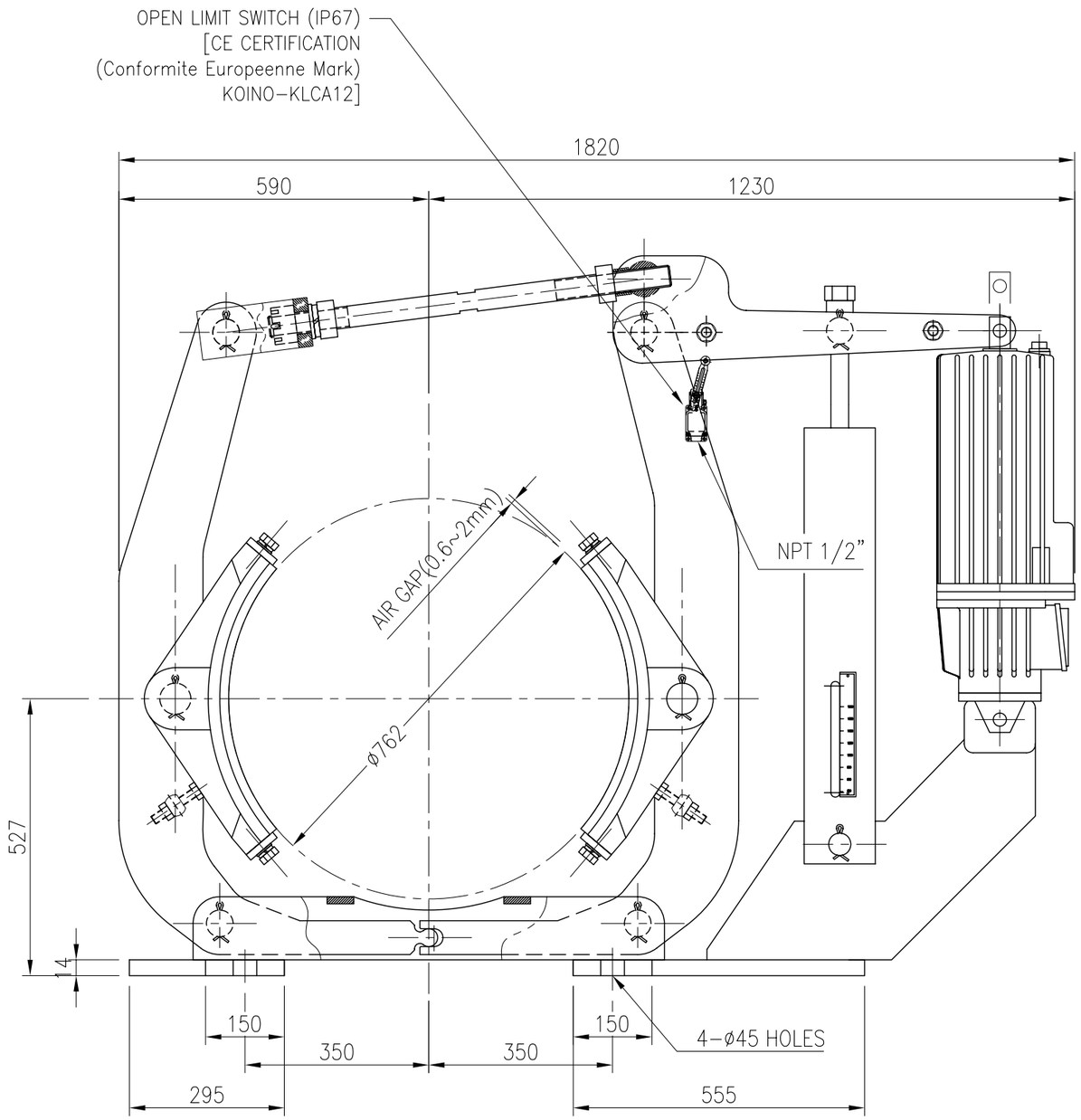

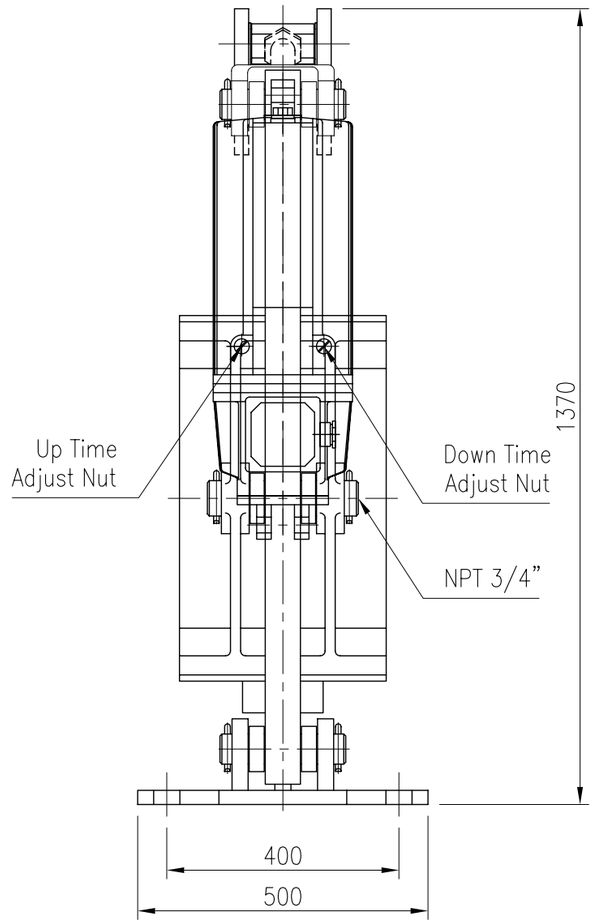

ITEM NO.	Q'TY	SPECIFICATION
CV-05A/B	2	HKB-HT527

FOR CONSTRUCTION

THIS DRAWING IS THE PROPERTY OF DOOSAN HEAVY INDUSTRIES & CONSTRUCTION CO., LTD.
IT IS NOT TO BE COPIED OR USED IN ANY WAY DETRIMENTAL TO THE COMPANY.

Rev.	Date	Prepared	Checked	Approved	Details of Revision
0	05.02.2013	ILSIN	Y.I.MIN	J.S.PARK	FOR CONSTRUCTION

Owner: AES-VCM MONG DUONG POWER COMPANY LIMITED

Consultant: POWER ENGINEERING CONSULTING JOINT STOCK COMPANY 2

Contractor: Doosan Heavy Industries & Construction Co., Ltd.

Project: MONG DUONG II 2x560MW(NET) COAL FIRED POWER PROJECT

	Date	Name
Drawn	05.10.2011	ILSIN
Checked	05.10.2011	Y.I.MIN
Approved	05.10.2011	J.S.PARK
Dept.		

Scale: NONE

Title: COAL HANDLING SYSTEM BELT CONVEYOR BRAKE ASSEMBLY

Doosan Heavy Industries & Construction Co., Ltd.

Dept. | Unid

Drawing No. T10206-XW03-P0ECC00-625052

Pc: T10206
UAS: XW03
KKS: ECC
Unit Code: P0
Reg. No: 625052
Rev.: 0 | Version
Page-No. 1/1

A0 (841 x 1189mm)

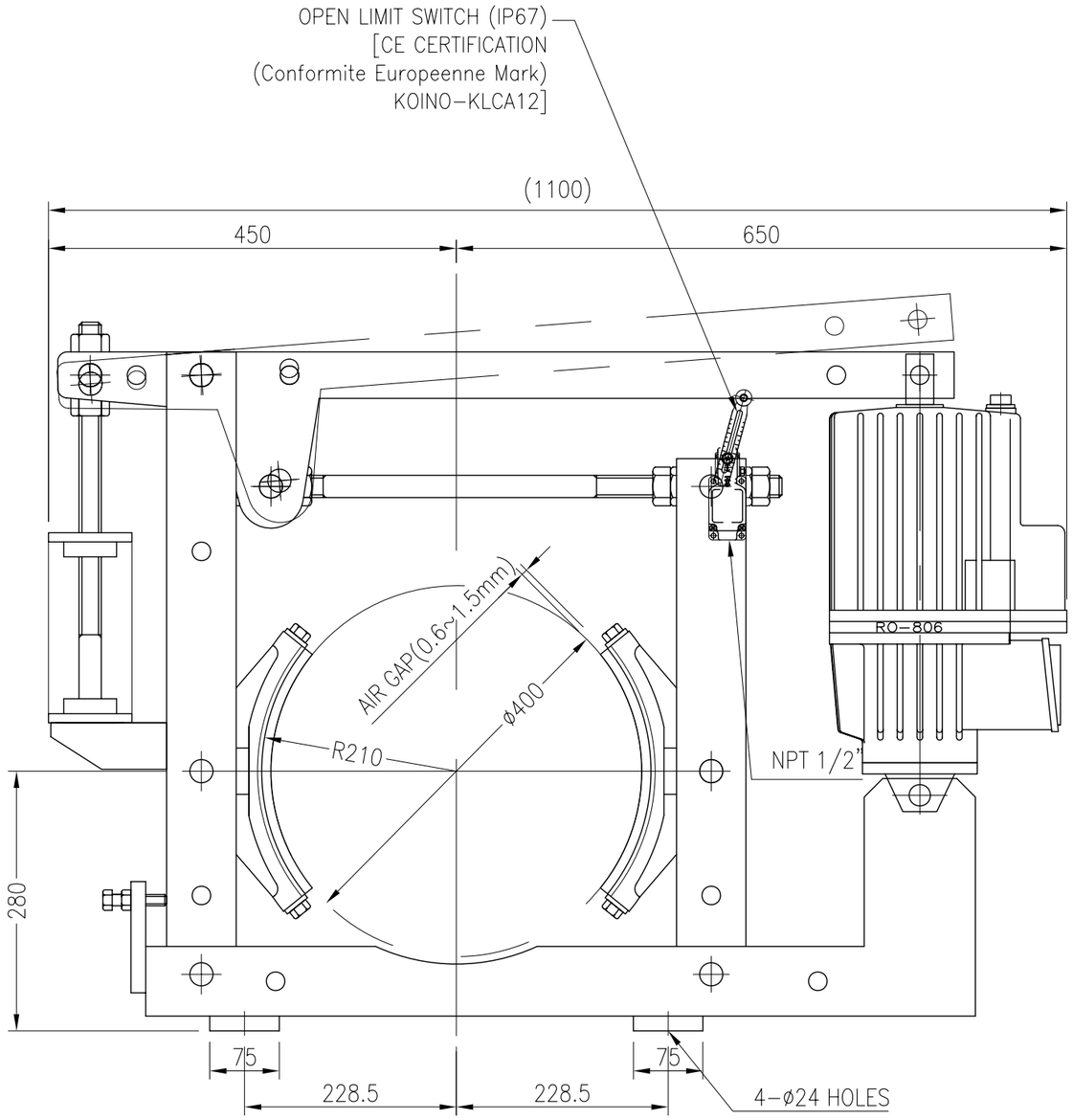

NOTE
1. RATING : 60%ED
2. INSULATION CLASS OF THRUSTOR COIL : "F" CLASS
3. PAINTING COLOR : RAL NO. 7035 200μm
4. SUPPLY SOURCE : AC 400V 3PH 50Hz
5. TORQUE : 132kg-m
6. OPEN LIMIT SWITCH (IP67)
7. LUBRICATION OIL : KSC2301 NO2
8. TOTAL Q'TY : 2 SETS

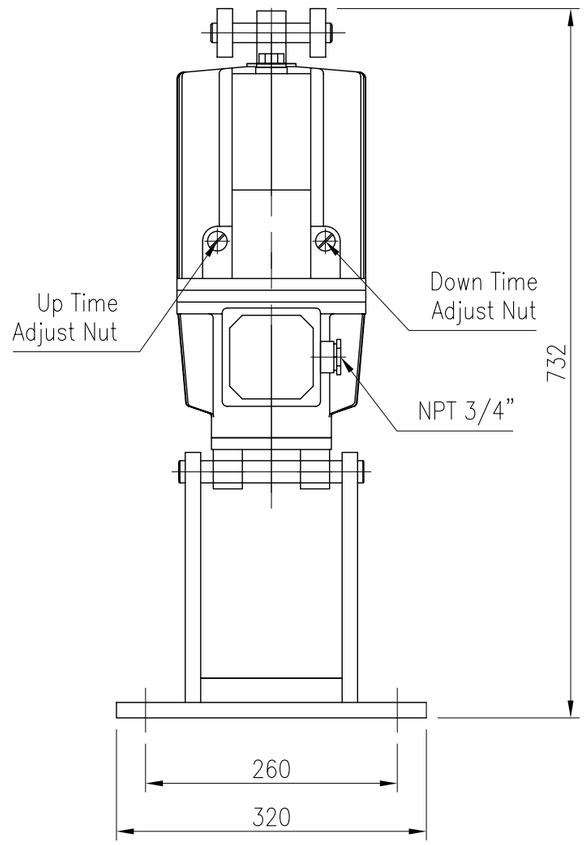

ITEM NO.	Q'TY	SPECIFICATION
CV-06A/B	1	HKB-HT280

FOR CONSTRUCTION

THIS DRAWING IS THE PROPERTY OF DOOSAN HEAVY INDUSTRIES & CONSTRUCTION CO., LTD.
IT IS NOT TO BE COPIED OR USED IN ANY WAY DETRIMENTAL TO THE COMPANY.

Rev.	Date	Prepared	Checked	Approved	Details of Revision
0	05.02.2013	ILSIN	Y.I.MIN	J.S.PARK	FOR CONSTRUCTION

Owner: ARS-VCM MONG DUONG POWER COMPANY LIMITED

Consultant: POWER ENGINEERING CONSULTING JOINT STOCK COMPANY 2

Contractor: Doosan Heavy Industries & Construction Co., Ltd.

Project: MONG DUONG II 2x560MW(NET) COAL FIRED POWER PROJECT

Fc: T10206
UAS: XW03
KKS: ECC

	Date	Name
Drawn	05.10.2011	ILSIN
Checked	05.10.2011	Y.I.MIN
Approved	05.10.2011	J.S.PARK
Dept.		

Scale: NONE

Title: COAL HANDLING SYSTEM BELT CONVEYOR BRAKE ASSEMBLY

Unit Code: P0

Reg. No: 625053

Doosan Heavy Industries & Construction Co., Ltd.

Dept.

Unid

Rev.: 0 Version:

Drawing No.: T10206-XW03-P0ECC00-625053

Page-No. 1/1

A0 (841 x 1189mm)

5. CONVEYOR BACK-STOP

A0 (841 x 1189mm)

DRAWING LIST

NO	DWG. NO	DWG. TITLE	REVISION						REMARK	NO	DWG. NO	DWG. TITLE	REVISION						REMARK
			0	1	2	3	4	5					0	1	2	3	4	5	
1	T10206-XW03-P0ECC00-625041	COAL HANDLING SYSTEM BELT CONVEYOR CV-01A/B BACK-STOP ASSEMBLY (BS-135K)	2013-02-05																
2	T10206-XW03-P0ECC00-625042	COAL HANDLING SYSTEM BELT CONVEYOR CV-02A/B BACK-STOP ASSEMBLY (BS-135K)	2013-02-05																
3	T10206-XW03-P0ECC00-625043	COAL HANDLING SYSTEM BELT CONVEYOR CV-03A/B BACK-STOP ASSEMBLY (BS-95K)	2013-02-05																
4	T10206-XW03-P0ECC00-625044	COAL HANDLING SYSTEM BELT CONVEYOR CV-05A/B BACK-STOP ASSEMBLY (BS-220K)	2013-02-05																

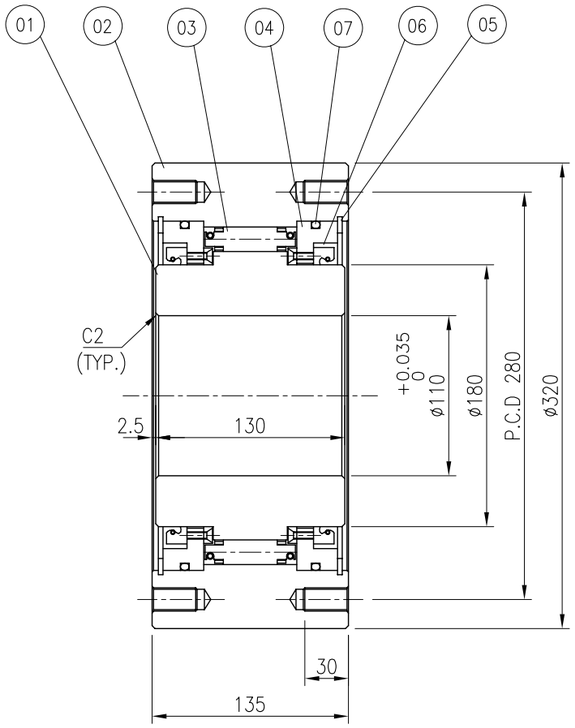

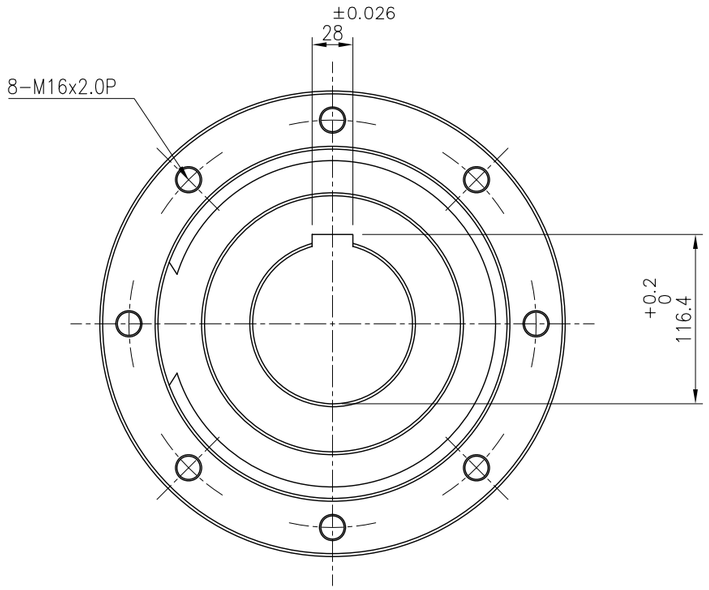

NOTES

1. LUBRICATION METHOD : PRE-LUBRICATED WITH GREASE.
   (NO MAINTENANCE REQUIRED)
2. BACK STOP TYPE : CAM CLUTCH.

ITEM NO.	NOMEMCLATURE	MATERIAL	QUAN'Y	SIZE	REMARK
07	O-RING	BUY	2	*	
06	OIL SEAL	BUY	2	180*210*16	
05	SNAP RING	BUY	2	NR240	
04	SIDE PLATE	SS41	2	*	
03	CAM&CAGE	SUJ2	*	*	
02	OUTER RACE	SCM-440	1	*	
01	INNER RACE	SCM-440	1	*	

SPECIFICATION				WEIGHT
HUB BORE(mm)		LOAD CAPACITY		
MAX	MIN	MAX. SPEED	BASIC TORQUE	
135	90	100 rpm	1750 kgf-m	68.0 kg

DWG. BY	DES'N BY	CH'D BY	APPROVE
C.KIM	Y.CHOI		J.JUN

DWG. DATE 12.06 | SCALE 1/2

SB SAM BO CLUTCH

BS135K BACK STOP

ASSEMBLY DRAWING

CUSTOMER

DWG. NO. SB*206-BS135K

MFG. Q'TY : TOTAL = 2 SETS

ITEM NO.	Q'TY	REF. DWG. NO.
CV-01A	1	T10206-UC02-P0ECC10-623101
CV-01B	1	T10206-UC02-P0ECC10-623101

FOR CONSTRUCTION

THIS DRAWING IS THE PROPERTY OF DOOSAN HEAVY INDUSTRIES & CONSTRUCTION CO., LTD.
IT IS NOT TO BE COPIED OR USED IN ANY WAY DETRIMENTAL TO THE COMPANY.

Rev.	Date	Prepared	Checked	Approved	Details of Revision
0	05.02.2013	ILSIN	Y.I.MIN	J.S.PARK	FOR CONSTRUCTION

Owner: AES-VCM MONG DUONG POWER COMPANY LIMITED

Consultant: POWER ENGINEERING CONSULTING JOINT STOCK COMPANY 2

Contractor: Doosan Heavy Industries & Construction Co., Ltd.

Project: MONG DUONG II 2x560MW(NET) COAL FIRED POWER PROJECT

Orig-Pc: T10206
PC: XW03
Type: ECC
Contents Code: P0

	Date	Name
Drawn	30.04.2012	ILSIN
Checked	30.04.2012	Y.I.MIN
Approved	30.04.2012	J.S.PARK
Dept.		

Scale: NONE

Title: COAL HANDLING SYSTEM
BELT CONVEYOR CV-01A/B
BACK-STOP ASSEMBLY
(BS-135K)

Doosan Heavy Industries & Construction Co., Ltd. | Dept. | Unit

Reg. No: 625041
Rev.: 0
Version:

Drawing No.: T10206-XW03-P0ECC00-625041

Page-No.: 1/1

A1 (841 x 594mm)

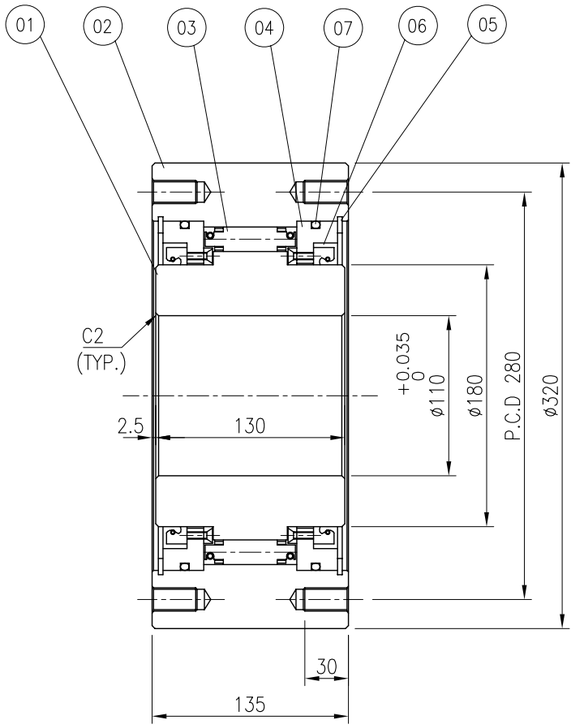

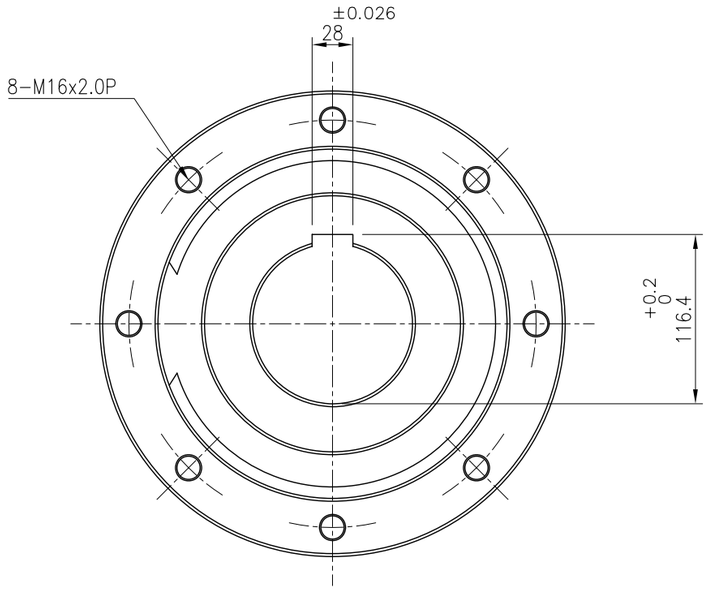

NOTES

1. LUBRICATION METHOD : PRE-LUBRICATED WITH GREASE.
   (NO MAINTENANCE REQUIRED)
2. BACK STOP TYPE : CAM CLUTCH.

ITEM NO.	NOMEMCLATURE	MATERIAL	QUAN'Y	SIZE	REMARK
07	O-RING	BUY	2	*	
06	OIL SEAL	BUY	2	180*210*16	
05	SNAP RING	BUY	2	NR240	
04	SIDE PLATE	SS41	2	*	
03	CAM&CAGE	SUJ2	*	*	
02	OUTER RACE	SCM-440	1	*	
01	INNER RACE	SCM-440	1	*	

SPECIFICATION				WEIGHT
HUB BORE(mm)		LOAD CAPACITY		
MAX	MIN	MAX. SPEED	BASIC TORQUE	
135	90	100 rpm	1750 kgf-m	68.0 kg

DWG. BY	DES'N BY	CH'D BY	APPROVE
C.KIM	Y.CHOI		J.JUN

DWG. DATE 12.06 | SCALE 1/2

SB SAM BO CLUTCH

BS135K BACK STOP

ASSEMBLY DRAWING

CUSTOMER

DWG. NO. SB*206-BS135K

MFG. Q'TY : TOTAL = 2 SETS

ITEM NO.	Q'TY	REF. DWG. NO.
CV-02A	1	T10206-UC02-P0ECC20-623101
CV-02B	1	T10206-UC02-P0ECC20-623101

FOR CONSTRUCTION

THIS DRAWING IS THE PROPERTY OF DOOSAN HEAVY INDUSTRIES & CONSTRUCTION CO., LTD.
IT IS NOT TO BE COPIED OR USED IN ANY WAY DETRIMENTAL TO THE COMPANY.

Rev.	Date	Prepared	Checked	Approved	Details of Revision
△					
△					
△					
△					
△	05.02.2013	ILSIN	Y.I.MIN	J.S.PARK	FOR CONSTRUCTION

Owner: AES-VCM MONG DUONG POWER COMPANY LIMITED

Consultant: POWER ENGINEERING CONSULTING JOINT STOCK COMPANY 2

Contractor: Doosan Heavy Industries & Construction Co., Ltd.

Project: MONG DUONG II 2x560MW(NET) COAL FIRED POWER PROJECT

Orig-Pc: T10206
PC: XW03
Type: ECC
Contents Code: P0

	Date	Name
Drawn	30.04.2012	ILSIN
Checked	30.04.2012	Y.I.MIN
Approved	30.04.2012	J.S.PARK
Dept.		

Scale: NONE

Title: COAL HANDLING SYSTEM
BELT CONVEYOR CV-02A/B
BACK-STOP ASSEMBLY
(BS-135K)

Reg. No: 625042

Doosan Heavy Industries & Construction Co., Ltd. | Dept. | Unit | Rev. 0 | Version

Drawing No. T10206-XW03-P0ECC00-625042 | Page-No. 1/1

A1 (841 x 594mm)

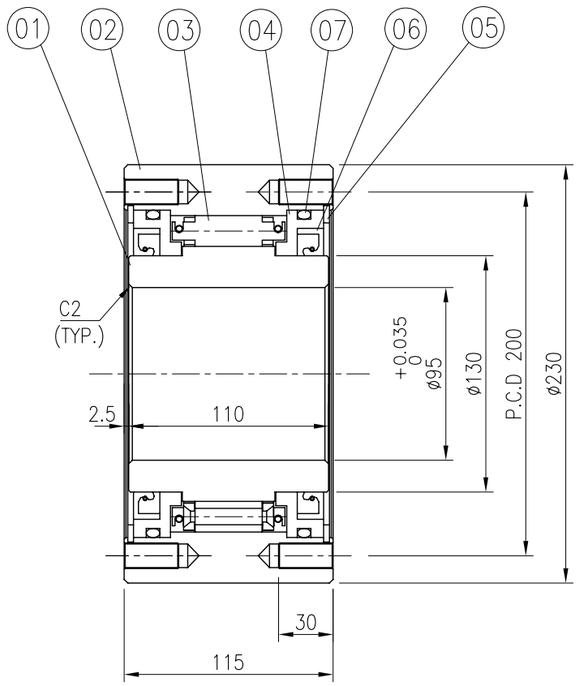

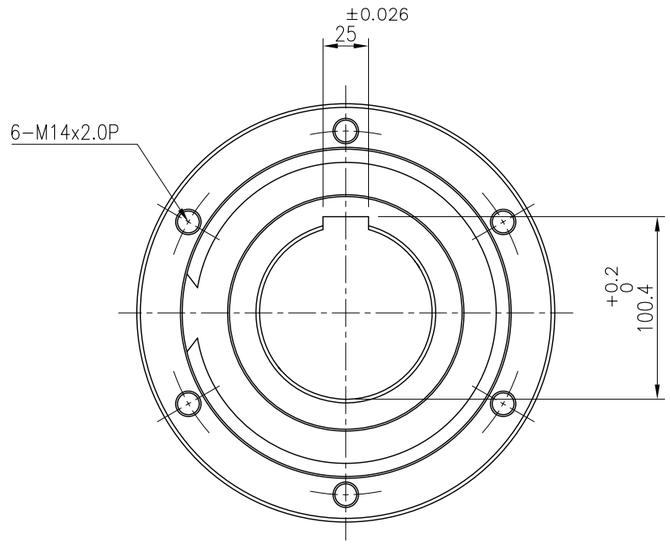

NOTES

1. LUBRICATION METHOD : PRE-LUBRICATED WITH GREASE.
   (NO MAINTENANCE REQUIRED)
2. BACK STOP TYPE : CAM CLUTCH.

ITEM NO.	NOMEMCLATURE	MATERIAL	QUAN'Y	SIZE	REMARK
07	O-RING	BUY	2	*	
06	OIL SEAL	BUY	2	130*150*14	
05	SNAP RING	BUY	2	NR180	
04	SIDE PLATE	SS41	2	*	
03	CAM&CAGE	SUJ2	1	*	
02	OUTER RACE	SCM-440	1	*	
01	INNER RACE	SCM-440	1	*	

SPECIFICATION				WEIGHT
HUB BORE(mm)		LOAD CAPACITY		
MAX	MIN	MAX. SPEED	BASIC TORQUE	
95	70	150 rpm	880 kgf-m	29.4 kg

DWG. BY	DES'N BY	CH'D BY	APPROVE
	CHOI		JUN

DWG. DATE 12.06 | SCALE 1/2

SB SAM BO CLUTCH

BS95K BACKSTOP

ASSEMBLY DRAWING

CUSTOMER

DWG. NO SB*206-BS95K

MFG. Q'TY : TOTAL = 2 SETS

ITEM NO.	Q'TY	REF. DWG. NO.
CV-03A	1	T10206-UC02-P0ECC31-623101
CV-03B	1	T10206-UC02-P0ECC32-623101

FOR CONSTRUCTION

THIS DRAWING IS THE PROPERTY OF DOOSAN HEAVY INDUSTRIES & CONSTRUCTION CO., LTD.
IT IS NOT TO BE COPIED OR USED IN ANY WAY DETRIMENTAL TO THE COMPANY.

Rev.	Date	Prepared	Checked	Approved	Details of Revision
1	05.02.2013	ILSIN	Y.I.MIN	J.S.PARK	FOR CONSTRUCTION

Owner: AES-VCM MONG DUONG POWER COMPANY LIMITED

Consultant: POWER ENGINEERING CONSULTING JOINT STOCK COMPANY 2

Contractor: Doosan Heavy Industries & Construction Co., Ltd.

Project: MONG DUONG II 2x560MW(NET) COAL FIRED POWER PROJECT

Orig-Pc: T10206
PC: XW03
Type: ECC
Contents Code: P0

	Date	Name
Drawn	30.04.2012	ILSIN
Checked	30.04.2012	Y.I.MIN
Approved	30.04.2012	J.S.PARK
Dept.		

Scale: NONE

Title: COAL HANDLING SYSTEM BELT CONVEYOR CV-03A/B BACK-STOP ASSEMBLY (BS-95K)

Reg. No: 625043

Doosan Heavy Industries & Construction Co., Ltd. | Dept. | Unid | Rev. 0 | Version

Drawing No. T10206-XW03-P0ECC00-625043 | Page-No. 1/1

A1 (841 x 594mm)

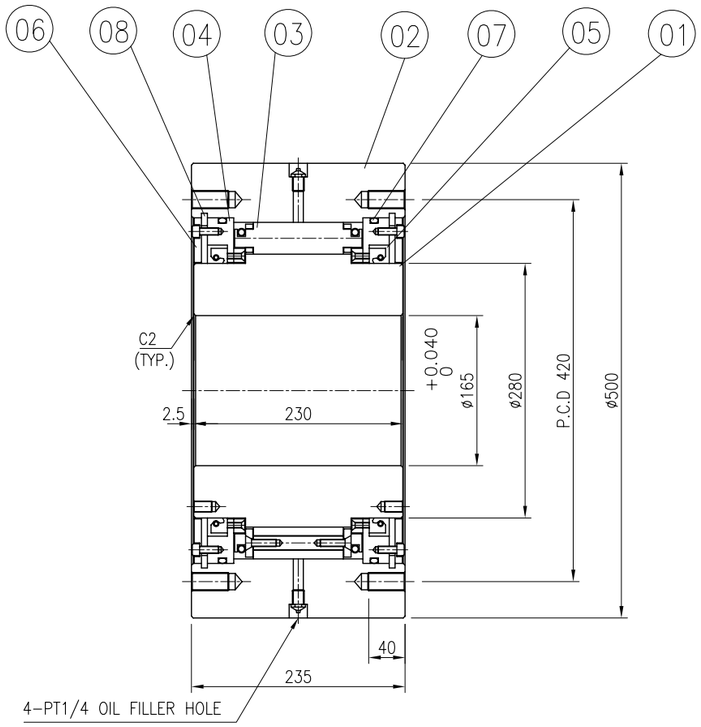

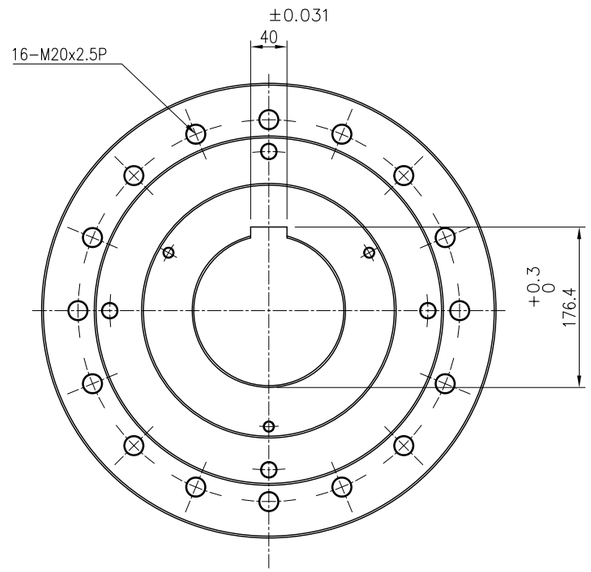

NOTES

1. LUBRICATION METHOD : BY MANUAL GREASE GUN.
2. BACK STOP TYPE : CAM CLUTCH.

ITEM NO.	NOMEMCLATURE	MATERIAL	QUAN'Y	REMARK
08	SNAP RING	BUY	2	
07	O-RING	BUY	2	
06	DUST COVER	SS41	2	
05	OIL SEAL	BUY	2	
04	SIDE PLATE	SS41	2	
03	CAM&CAGE	SUJ2	1	
02	OUTER RACE	SCM-440	1	
01	INNER RACE	SCM-440	1	

SPECIFICATION				WEIGHT	OIL
HUB BORE(mm)		LOAD CAPACITY			
MAX	MIN	MAX. SPEED	BASIC TORQUE		
220	150	80 rpm	5500 kgf-m	263.5 kg	900 cc

MFG. Q'TY : TOTAL = 2 SETS

ITEM NO.	Q'TY	REF. DWG. NO.
CV-05A	1	T10206-UC02-P0ECC50-623101
CV-05B	1	T10206-UC02-P0ECC50-623101

FOR CONSTRUCTION

THIS DRAWING IS THE PROPERTY OF DOOSAN HEAVY INDUSTRIES & CONSTRUCTION CO., LTD.
IT IS NOT TO BE COPIED OR USED IN ANY WAY DETRIMENTAL TO THE COMPANY.

Rev.	Date	Prepared	Checked	Approved	Details of Revision
1	05.02.2013	ILSIN	Y.I.MIN	J.S.PARK	FOR CONSTRUCTION

DWG. BY	DES'N BY	CH'D BY	APPROVE
	Y.CHOI		J.JUN

DWG. DATE 12.06 | SCALE N/S

SB SAM BO CLUTCH

BS220K BACK STOP

ASSEMBLY DRAWING

CUSTOMER

DWG. NO. SB*206-BS220K

Owner: AES-VCM MONG DUONG POWER COMPANY LIMITED

Consultant: POWER ENGINEERING CONSULTING JOINT STOCK COMPANY 2

Contractor: Doosan Heavy Industries & Construction Co., Ltd.

Project: MONG DUONG II 2x560MW(NET) COAL FIRED POWER PROJECT

Orig-Pc: T10206
PC: XW03
Type: ECC
Contents Code: P0

	Date	Name
Drawn	30.04.2012	ILSIN
Checked	30.04.2012	Y.I.MIN
Approved	30.04.2012	J.S.PARK

Scale: NONE

Title: COAL HANDLING SYSTEM BELT CONVEYOR CV-05A/B BACK-STOP ASSEMBLY (BS-220K)

Reg. No: 625044

Dept.: Doosan Heavy Industries & Construction Co., Ltd.

Rev.: 0 | Version:

Drawing No.: T10206-XW03-P0ECC00-625044

Page-No.: 1/1

A1 (841 x 594mm)

6. CONVEYOR IDLER

A0 (841 x 1189mm)

DRAWING LIST

NO	DWG. NO	DWG. TITLE	REVISION						REMARK	NO	DWG. NO	DWG. TITLE	REVISION						REMARK
			0	1	2	3	4	5					0	1	2	3	4	5	
1	T10206-XW03-P0ECC00-625001	COAL HANDLING SYSTEM CARRIER IDLER 1200Wx35° ASSEMBLY DRAWING	2013-02-05																
2	T10206-XW03-P0ECC00-625002	COAL HANDLING SYSTEM RETURN IDLER 1200W ASSEMBLY DRAWING	2013-02-05																
3	T10206-XW03-P0ECC00-625003	COAL HANDLING SYSTEM IMPACT IDLER 1200Wx35° ASSEMBLY DRAWING	2013-02-05																
4	T10206-XW03-P0ECC00-625004	COAL HANDLING SYSTEM CARRIER S.A 1200Wx35° ASSEMBLY DRAWING	2013-02-05																
5	T10206-XW03-P0ECC00-625005	COAL HANDLING SYSTEM CARRIER S.A REVERSIBLE 1200Wx35° ASSEMBLY DRAWING	2013-02-05																
6	T10206-XW03-P0ECC00-625006	COAL HANDLING SYSTEM RETRUN S.A 1200W ASSEMBLY DRAWING	2013-02-05																
7	T10206-XW03-P0ECC00-625007	COAL HANDLING SYSTEM TRANSITION IDLER 1200Wx5°~25° ASSEMBLY DRAWING	2013-02-05																
8	T10206-XW03-P0ECC00-625008	COAL HANDLING SYSTEM WEIGHING IDLER 1200Wx35° ASSEMBLY DRAWING	2013-02-05																
9	T10206-XW03-P0ECC00-625009	COAL HANDLING SYSTEM CARRIER IDLER 1400Wx20° ASSEMBLY DRAWING	2013-02-05																
10	T10206-XW03-P0ECC00-625010	COAL HANDLING SYSTEM RETURN IDLER 1400W ASSEMBLY DRAWING	2013-02-05																
11	T10206-XW03-P0ECC00-625011	COAL HANDLING SYSTEM IMPACT IDLER 1400Wx20° ASSEMBLY DRAWING	2013-02-05																
12	T10206-XW03-P0ECC00-625012	COAL HANDLING SYSTEM CARRIER S.A 1400Wx20° ASSEMBLY DRAWING	2013-02-05																
13	T10206-XW03-P0ECC00-625013	COAL HANDLING SYSTEM RETRUN S.A 1400W ASSEMBLY DRAWING	2013-02-05																
14	T10206-XW03-P0ECC00-625014	COAL HANDLING SYSTEM TRANSITION IDLER 1400Wx5°~25° ASSEMBLY DRAWING	2013-02-05																
15	T10206-XW03-P0ECC00-625015	COAL HANDLING SYSTEM CARRIER IDLER 1200Wx45° ASSEMBLY DRAWING	2013-02-05																
16	T10206-XW03-P0ECC00-625016	COAL HANDLING SYSTEM TRANSITION IDLER 1200Wx20°~45° ASSEMBLY DRAWING	2013-02-05																

CARRIER IDLER 1200W x 35°, MFG. Q'TY = 3146 Sets

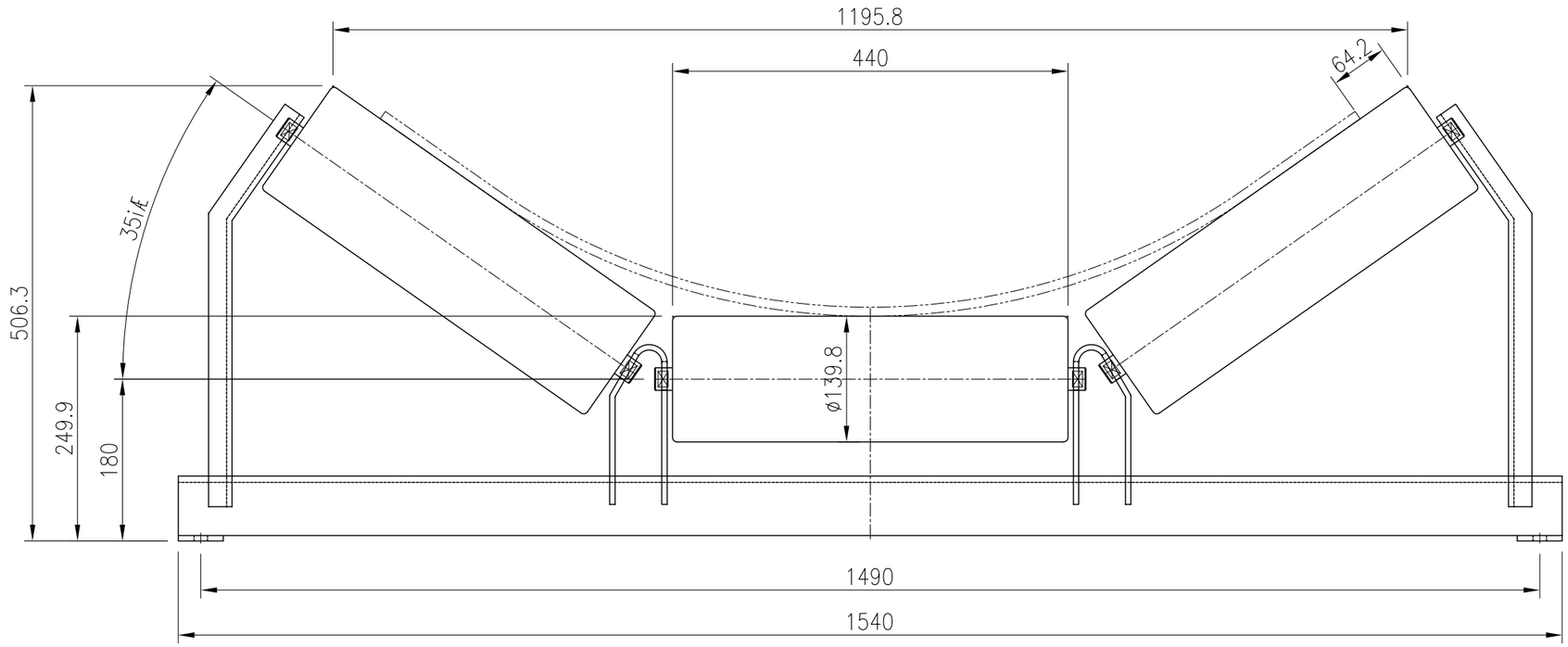

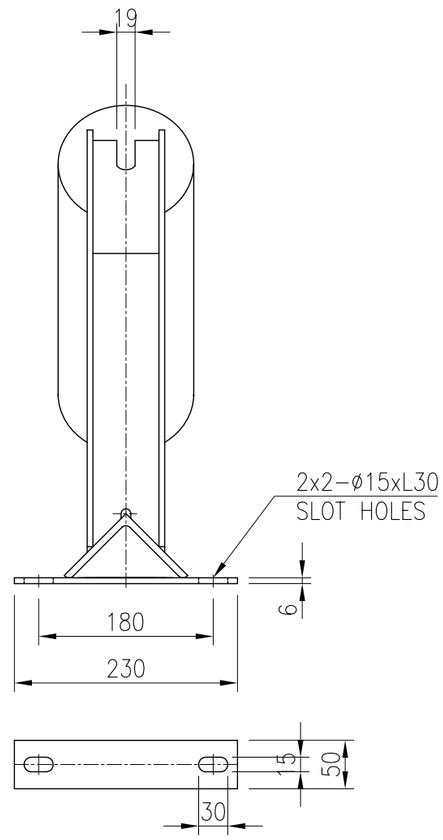

NOTES

1. ROLLER – MAKER STANDARD.
   POWDER COATING.
   (COLOR : BLACK)
2. STAND – HOT DIP GALV. OF ASTM A 123.
   (100μm)
3. BEARING No. – 6205zz

MFG. Q'TY : TOTAL = 3146 SETS

ITEM NO.	Q'TY	REF. DWG. NO.
CV-01A	92	T10206-UC02-P0ECC11-623001
CV-01B	91	T10206-UC02-P0ECC12-623002
CV-02A	61	T10206-UC02-P0ECC21-623001
CV-02B	64	T10206-UC02-P0ECC22-623002
CV-03A	376	T10206-UC02-P0ECC31-623001~4
CV-03B	375	T10206-UC02-P0ECC32-623001~4
CV-04A	406	T10206-UC02-P0ECC40-623001~4
CV-04B	406	T10206-UC02-P0ECC40-623001~4
CV-05A	420	T10206-UC02-P0ECC51-623001~6
CV-05B	425	T10206-UC02-P0ECC52-623007~12
CV-06A	215	T10206-UC02-P0ECC61-623001~3
CV-06B	215	T10206-UC02-P0ECC61-623004~6

FOR CONSTRUCTION

THIS DRAWING IS THE PROPERTY OF DOOSAN HEAVY INDUSTRIES & CONSTRUCTION CO., LTD.
IT IS NOT TO BE COPIED OR USED IN ANY WAY DETRIMENTAL TO THE COMPANY.

Rev.	Date	Prepared	Checked	Approved	Details of Revision
1	05.02.2013	ILSIN	Y.I.MIN	J.S.PARK	FOR CONSTRUCTION

Owner: AES-VCM MONG DUONG POWER COMPANY LIMITED

Consultant: POWER ENGINEERING CONSULTING JOINT STOCK COMPANY 2

Contractor: Doosan Heavy Industries & Construction Co., Ltd.

Project: MONG DUONG II 2x560MW(NET) COAL FIRED POWER PROJECT

	Date	Name
Drawn	30.04.2012	ILSIN
Checked	30.04.2012	Y.I.MIN
Approved	30.04.2012	J.S.PARK
Dept.		

Scale: NONE

Title: COAL HANDLING SYSTEM CARRIER IDLER 1200Wx35° ASSEMBLY DRAWING

Orig-Pc: T10206
PC: XW03
Type: ECC
Contents Code: P0
Reg. No: 625001
Rev.: 0
Version:
Dept.:
Unid:
Drawing No.: T10206-XW03-P0ECC00-625001
Page-No.: 1/1

Doosan Heavy Industries & Construction Co., Ltd.

A1 (841 x 594mm)

RETURN IDLER 1200W, MFG. Q'TY = 964 Sets

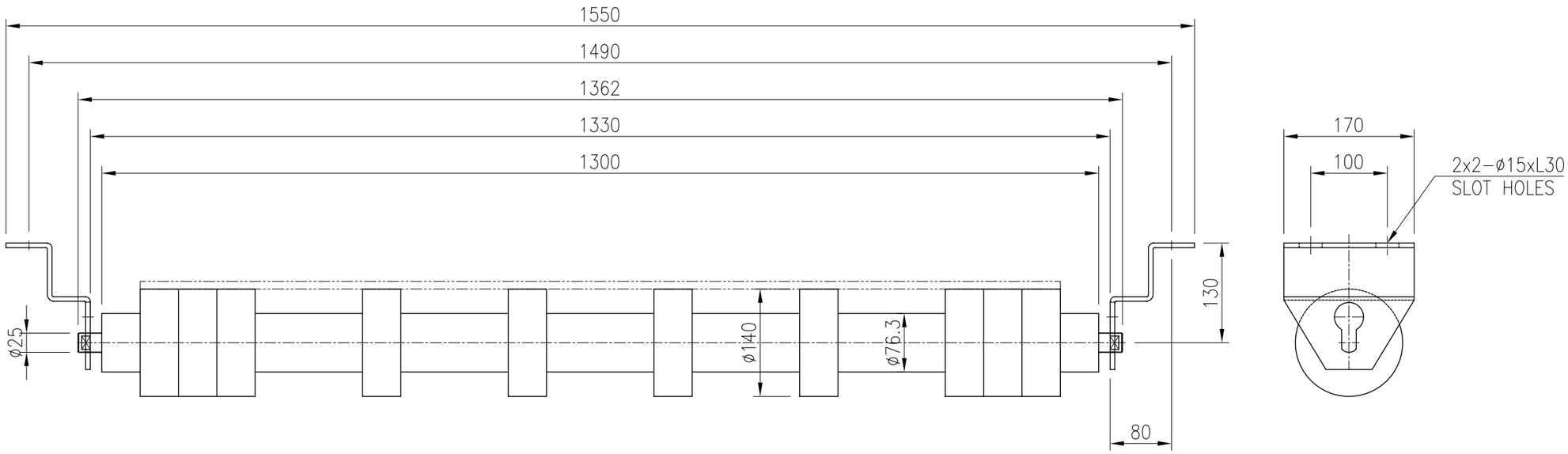

NOTES

1. ROLLER – MAKER STANDARD.
   POWDER COATING.
   (COLOR : BLACK)
2. STAND – HOT DIP GALV. OF ASTM A 123.
   (100μm)
3. BEARING No. – 6205zz
4. RUBBER DISC TYPE.

MFG. Q'TY : TOTAL = 964 Sets

ITEM NO.	Q'TY	REF. DWG. NO.
CV-01A	28	T10206-UC02-P0ECC11-623001
CV-01B	27	T10206-UC02-P0ECC12-623002
CV-02A	17	T10206-UC02-P0ECC21-623001
CV-02B	18	T10206-UC02-P0ECC22-623002
CV-03A	109	T10206-UC02-P0ECC31-623001~4
CV-03B	109	T10206-UC02-P0ECC32-623001~4
CV-04A	123	T10206-UC02-P0ECC40-623001~4
CV-04B	123	T10206-UC02-P0ECC40-623001~4
CV-05A	132	T10206-UC02-P0ECC51-623001~6
CV-05B	134	T10206-UC02-P0ECC52-623007~12
CV-06A	72	T10206-UC02-P0ECC61-623001~3
CV-06B	72	T10206-UC02-P0ECC61-623004~6

FOR CONSTRUCTION

THIS DRAWING IS THE PROPERTY OF DOOSAN HEAVY INDUSTRIES & CONSTRUCTION CO., LTD.
IT IS NOT TO BE COPIED OR USED IN ANY WAY DETRIMENTAL TO THE COMPANY.

Rev.	Date	Prepared	Checked	Approved	Details of Revision
1	05.02.2013	ILSIN	Y.I.MIN	J.S.PARK	FOR CONSTRUCTION

Owner: AES-VCM MONG DUONG POWER COMPANY LIMITED

Consultant: POWER ENGINEERING CONSULTING JOINT STOCK COMPANY 2

Contractor: Doosan Heavy Industries & Construction Co., Ltd.

Project: MONG DUONG II 2x560MW(NET) COAL FIRED POWER PROJECT

Orig-Pc: T10206
PC: XW03
Type: ECC
Contents Code: P0

	Date	Name
Drawn	30.04.2012	ILSIN
Checked	30.04.2012	Y.I.MIN
Approved	30.04.2012	J.S.PARK
Dept.		

Scale: NONE

Title: COAL HANDLING SYSTEM RETURN IDLER 1200W ASSEMBLY DRAWING

Reg. No: 625002

Doosan Heavy Industries & Construction Co., Ltd. | Dept. | Unid | Rev. 0 | Version

Drawing No.: T10206-XW03-P0ECC00-625002

Page-No. 1/1

A1 (841 x 594mm)

IMPACT IDLER 1200W x 35°, MFG. Q'TY = 100 Sets

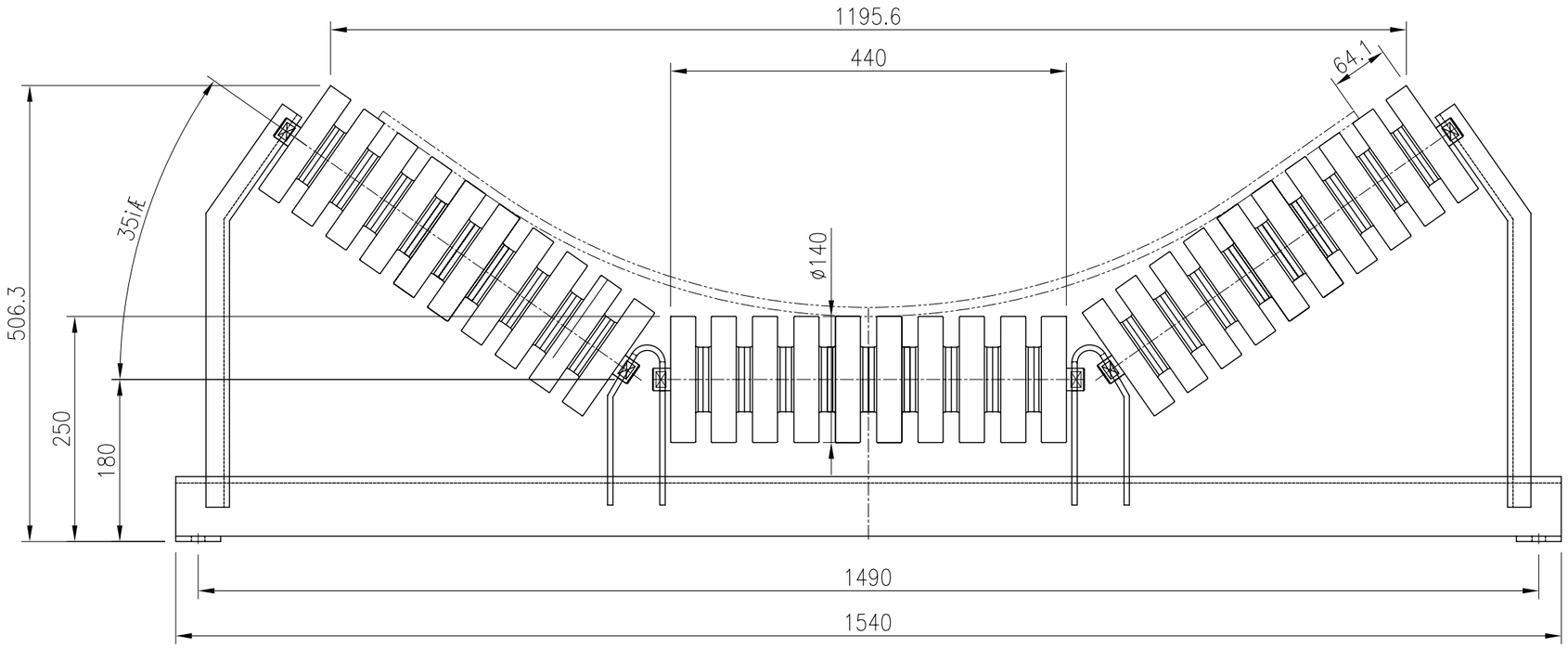

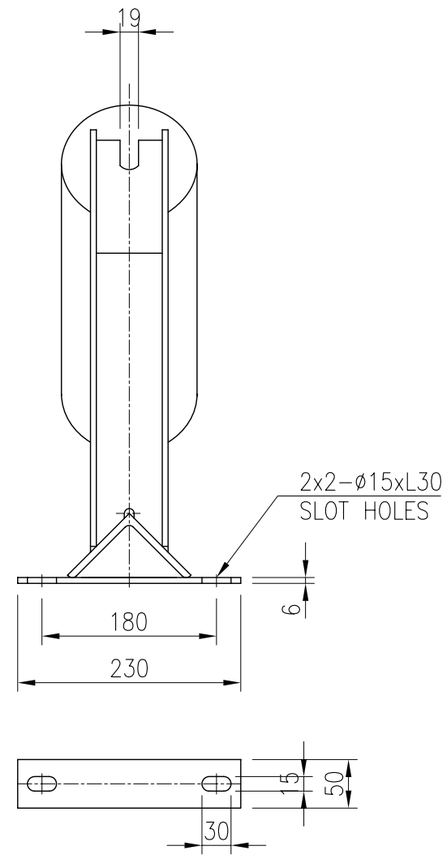

NOTES

1. ROLLER – MAKER STANDARD.
   POWDER COATING.
   (COLOR : BLACK)
2. STAND – HOT DIP GALV. OF ASTM A 123.
   (100μm)
3. BEARING No. – 6205zz

MFG. Q'TY : TOTAL = 100 SETS

ITEM NO.	Q'TY	REF. DWG. NO.
CV-01A	10	T10206-UC02-P0ECC11-623001
CV-01B	10	T10206-UC02-P0ECC12-623002
CV-02A	5	T10206-UC02-P0ECC21-623001
CV-02B	5	T10206-UC02-P0ECC22-623002
CV-03A	10	T10206-UC02-P0ECC31-623001~4
CV-03B	10	T10206-UC02-P0ECC32-623001~4
CV-04A	–	T10206-UC02-P0ECC40-623001~4
CV-04B	–	T10206-UC02-P0ECC40-623001~4
CV-05A	20	T10206-UC02-P0ECC51-623001~6
CV-05B	20	T10206-UC02-P0ECC52-623007~12
CV-06A	5	T10206-UC02-P0ECC61-623001~3
CV-06B	5	T10206-UC02-P0ECC61-623004~6

FOR CONSTRUCTION

THIS DRAWING IS THE PROPERTY OF DOOSAN HEAVY INDUSTRIES & CONSTRUCTION CO., LTD.
IT IS NOT TO BE COPIED OR USED IN ANY WAY DETRIMENTAL TO THE COMPANY.

Rev.	Date	Prepared	Checked	Approved	Details of Revision
0	05.02.2013	ILSIN	Y.I.MIN	J.S.PARK	FOR CONSTRUCTION

Owner: AES-VCM MONG DUONG POWER COMPANY LIMITED

Consultant: POWER ENGINEERING CONSULTING JOINT STOCK COMPANY 2

Contractor: Doosan Heavy Industries & Construction Co., Ltd.

Project: MONG DUONG II 2x560MW(NET) COAL FIRED POWER PROJECT

Orig-Pc: T10206
PC: XW03
Type: ECC
Contents Code: P0

	Date	Name
Drawn	30.04.2012	ILSIN
Checked	30.04.2012	Y.I.MIN
Approved	30.04.2012	J.S.PARK
Dept.		

Scale: NONE

Title: COAL HANDLING SYSTEM IMPACT IDLER 1200Wx35° ASSEMBLY DRAWING

Reg. No: 625003

Doosan Heavy Industries & Construction Co., Ltd. | Dept. | Unid | Rev. 0 | Version

Drawing No. T10206-XW03-P0ECC00-625003 | Page-No. 1/1

A1 (841 x 594mm)

CARRIER S.A IDLER 1200W x 35°, MFG. Q'TY = 64 Sets

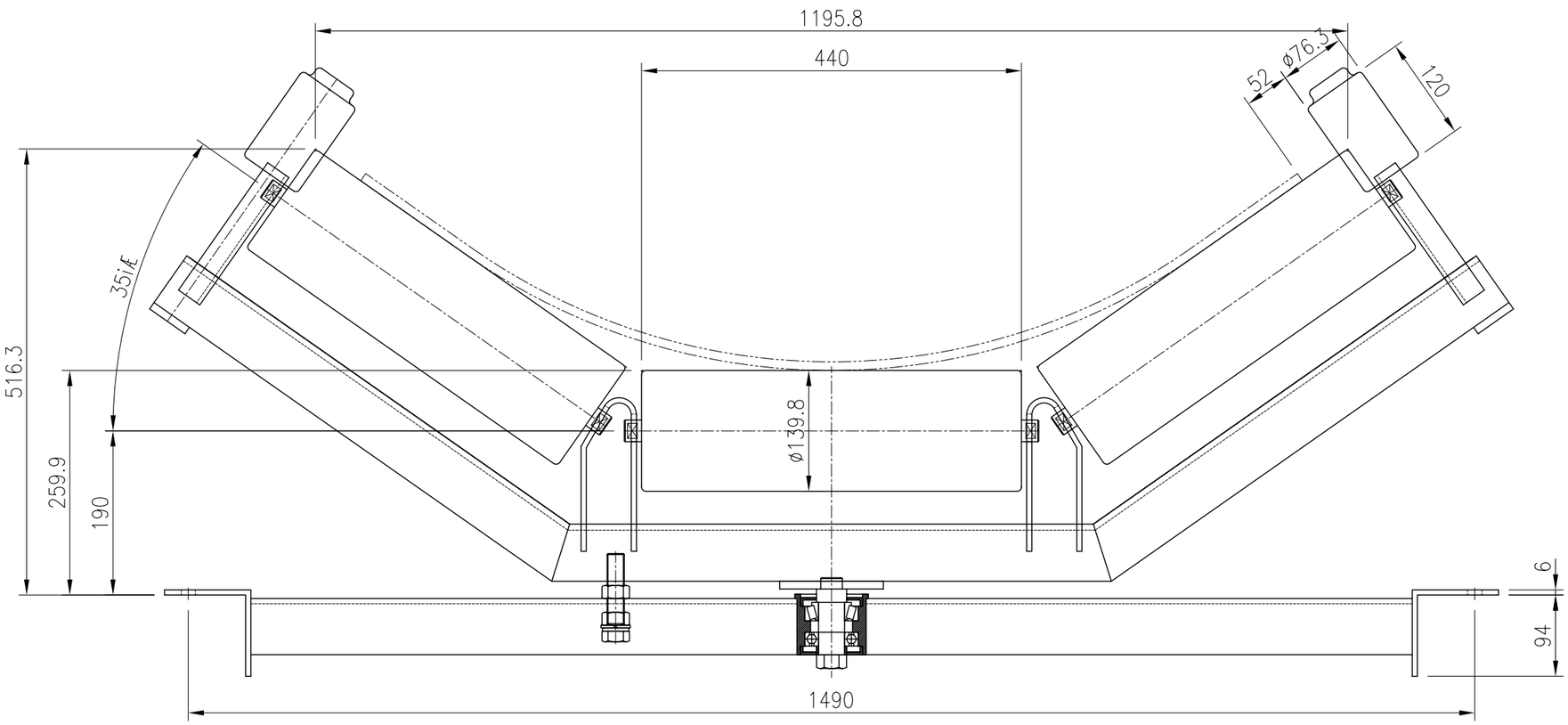

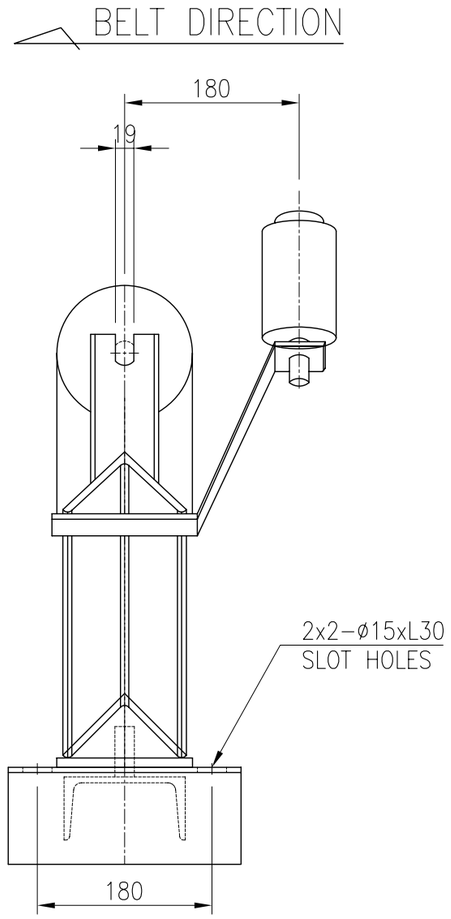

NOTES

1. ROLLER – MAKER STANDARD.
   POWDER COATING.
   (COLOR : BLACK)
2. STAND – HOT DIP GALV. OF ASTM A 123.
   (100μm)
3. BEARING No. – 6205zz
4. TILTING – 5°

MFG. Q'TY : TOTAL = 64 SETS

ITEM NO.	Q'TY	REF. DWG. NO.
CV-01A	5	T10206-UC02-P0ECC11-623001
CV-01B	5	T10206-UC02-P0ECC12-623002
CV-02A	3	T10206-UC02-P0ECC21-623001
CV-02B	3	T10206-UC02-P0ECC22-623002
CV-03A	2	T10206-UC02-P0ECC31-623001~4
CV-03B	2	T10206-UC02-P0ECC32-623001~4
CV-04A	2	T10206-UC02-P0ECC40-623001~4
CV-04B	2	T10206-UC02-P0ECC40-623001~4
CV-05A	20	T10206-UC02-P0ECC51-623001~6
CV-05B	20	T10206-UC02-P0ECC52-623007~12
CV-06A	–	T10206-UC02-P0ECC61-623001~3
CV-06B	–	T10206-UC02-P0ECC61-623004~6

** NOTE : PLEASE CHECK BELT DIRECTION AT FIELD ERECTION.

FOR CONSTRUCTION

THIS DRAWING IS THE PROPERTY OF DOOSAN HEAVY INDUSTRIES & CONSTRUCTION CO., LTD.
IT IS NOT TO BE COPIED OR USED IN ANY WAY DETRIMENTAL TO THE COMPANY.

Rev.	Date	Prepared	Checked	Approved	Details of Revision
0	05.02.2013	ILSIN	Y.I.MIN	J.S.PARK	FOR CONSTRUCTION

Owner: AES-VCM MONG DUONG POWER COMPANY LIMITED

Consultant: POWER ENGINEERING CONSULTING JOINT STOCK COMPANY 2

Contractor: Doosan Heavy Industries & Construction Co., Ltd.

Project: MONG DUONG II 2x560MW(NET) COAL FIRED POWER PROJECT

Orig-Pc: T10206
PC: XW03
Type: ECC
Contents Code: P0

	Date	Name
Drawn	30.04.2012	ILSIN
Checked	30.04.2012	Y.I.MIN
Approved	30.04.2012	J.S.PARK
Dept.		

Scale: NONE

Title: COAL HANDLING SYSTEM CARRIER S.A 1200Wx35° ASSEMBLY DRAWING

Reg. No: 625004
Rev.: 0
Version:

Doosan Heavy Industries & Construction Co., Ltd. | Dept. | Unid

Drawing No.: T10206-XW03-P0ECC00-625004

Page-No.: 1/1

A1 (841 x 594mm)

CARRIER REVERSIBLE S.A 1200W x 35°, MFG. Q'TY = 82 Sets

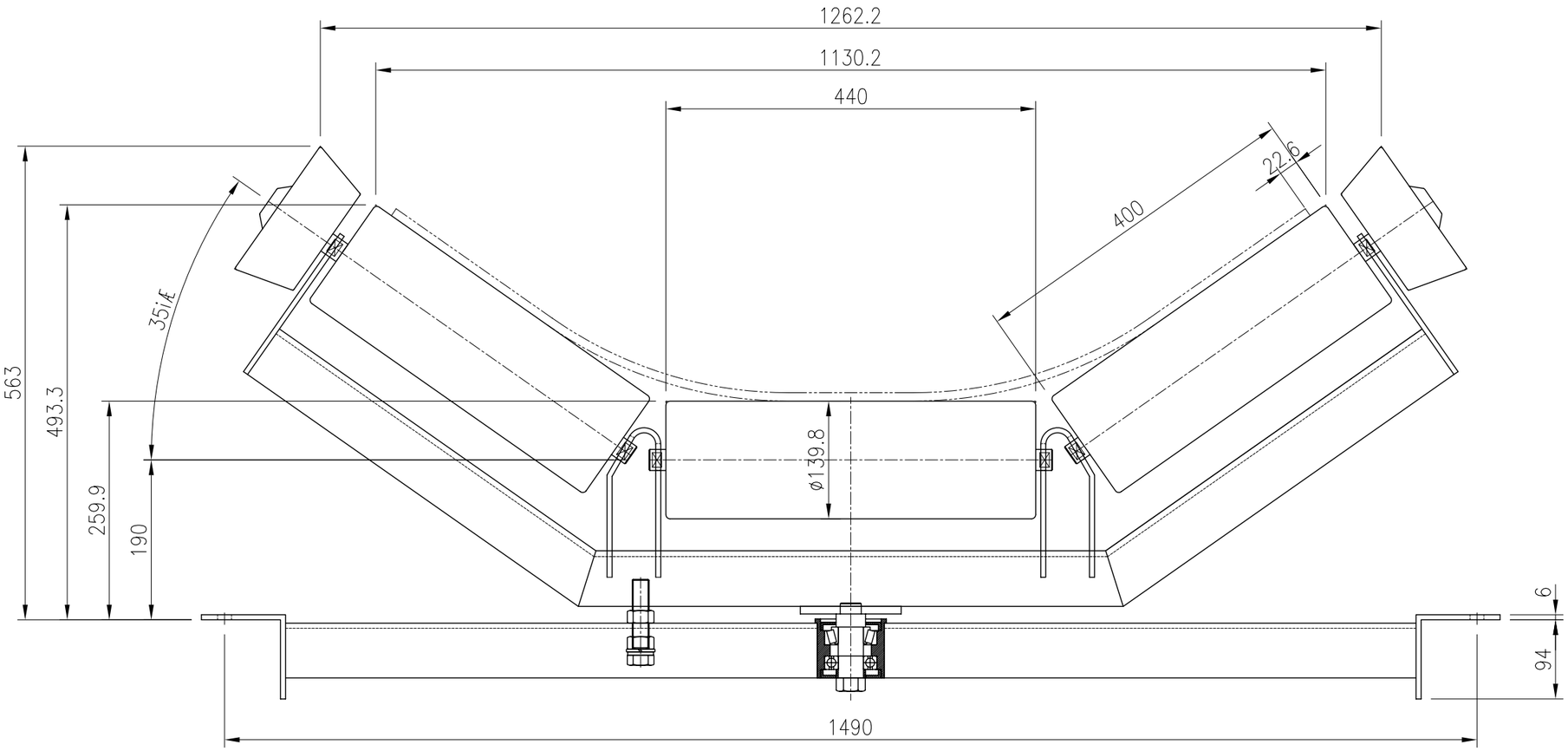

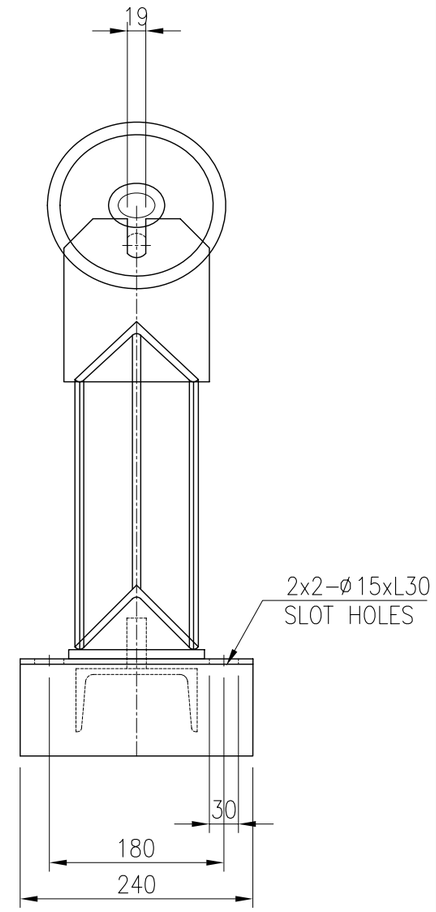

FOR CONSTRUCTION

NOTES

1. ROLLER – MAKER STANDARD.
   POWDER COATING.
   (COLOR : BLACK)
2. STAND – HOT DIP GALV. OF ASTM A 123.
   (100μm)
3. BEARING No. – 6205zz
4. TILTING – 5°

MFG. Q'TY : TOTAL = 82 SETS

ITEM NO.	Q'TY	REF. DWG. NO.
CV-01A	–	T10206-UC02-P0ECC11-623001
CV-01B	–	T10206-UC02-P0ECC12-623002
CV-02A	–	T10206-UC02-P0ECC21-623001
CV-02B	–	T10206-UC02-P0ECC22-623002
CV-03A	15	T10206-UC02-P0ECC31-623001~4
CV-03B	15	T10206-UC02-P0ECC32-623001~4
CV-04A	16	T10206-UC02-P0ECC40-623001~4
CV-04B	16	T10206-UC02-P0ECC40-623001~4
CV-05A	–	T10206-UC02-P0ECC51-623001~6
CV-05B	–	T10206-UC02-P0ECC52-623007~12
CV-06A	10	T10206-UC02-P0ECC61-623001~3
CV-06B	10	T10206-UC02-P0ECC61-623004~6

THIS DRAWING IS THE PROPERTY OF DOOSAN HEAVY INDUSTRIES & CONSTRUCTION CO., LTD.
IT IS NOT TO BE COPIED OR USED IN ANY WAY DETRIMENTAL TO THE COMPANY.

Rev.	Date	Prepared	Checked	Approved	Details of Revision
0	05.02.2013	ILSIN	Y.I.MIN	J.S.PARK	FOR CONSTRUCTION

Owner: AES-VCM MONG DUONG POWER COMPANY LIMITED

Consultant: POWER ENGINEERING CONSULTING JOINT STOCK COMPANY 2

Contractor: Doosan Heavy Industries & Construction Co., Ltd.

Project: MONG DUONG II 2x560MW(NET) COAL FIRED POWER PROJECT

Orig-Pc: T10206
PC: XW03
Type: ECC
Contents Code: P0

	Date	Name
Drawn	30.04.2012	ILSIN
Checked	30.04.2012	Y.I.MIN
Approved	30.04.2012	J.S.PARK

Scale: NONE

Title: COAL HANDLING SYSTEM CARRIER S.A REVERSIBLE 1200Wx35° ASSEMBLY DRAWING

Dept.: Doosan Heavy Industries & Construction Co., Ltd.

Dept. | Unid

Reg. No: 625005
Rev.: 0
Version:

Drawing No.: T10206-XW03-P0ECC00-625005

Page-No.: 1/1

A1 (841 x 594mm)

RETRUN S.A IDLER 1200W, MFG. Q'TY = 146 Sets

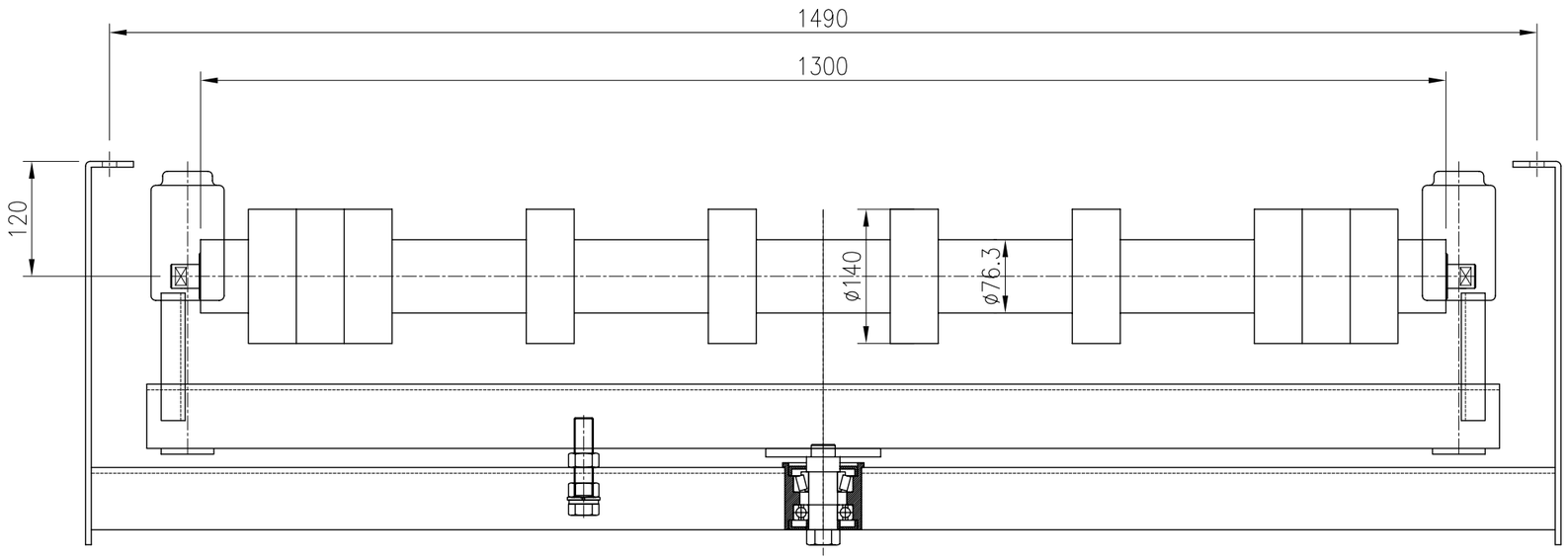

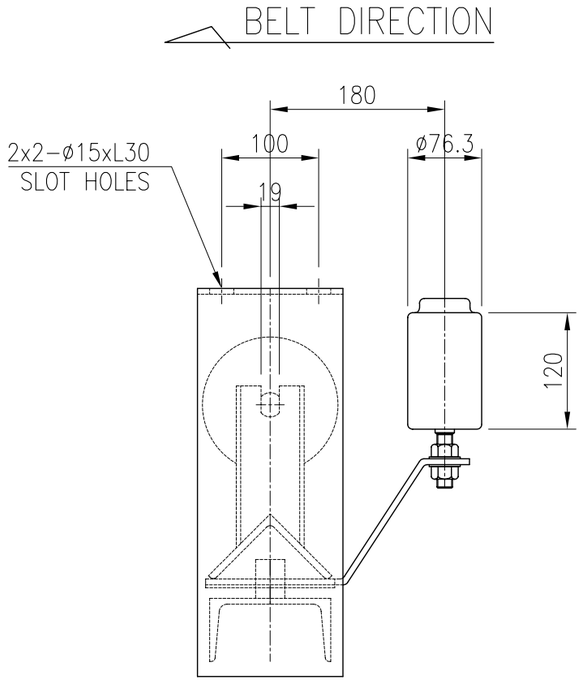

NOTES

1. ROLLER – MAKER STANDARD.
   POWDER COATING.
   (COLOR : BLACK)
2. STAND – HOT DIP GALV. OF ASTM A 123.
   (100μm)
3. BEARING No. – 6205zz
4. RUBBER DISC TYPE
5. TILTING – 5°

MFG. Q'TY : TOTAL = 146 SETS

ITEM NO.	Q'TY	REF. DWG. NO.
CV-01A	5	T10206-UC02-P0ECC11-623001
CV-01B	5	T10206-UC02-P0ECC12-623002
CV-02A	3	T10206-UC02-P0ECC21-623001
CV-02B	3	T10206-UC02-P0ECC22-623002
CV-03A	17	T10206-UC02-P0ECC31-623001~4
CV-03B	17	T10206-UC02-P0ECC32-623001~4
CV-04A	18	T10206-UC02-P0ECC40-623001~4
CV-04B	18	T10206-UC02-P0ECC40-623001~4
CV-05A	20	T10206-UC02-P0ECC51-623001~6
CV-05B	20	T10206-UC02-P0ECC52-623007~12
CV-06A	10	T10206-UC02-P0ECC61-623001~3
CV-06B	10	T10206-UC02-P0ECC61-623004~6

** NOTE : PLEASE CHECK BELT DIRECTION AT FIELD ERECTION.

FOR CONSTRUCTION

THIS DRAWING IS THE PROPERTY OF DOOSAN HEAVY INDUSTRIES & CONSTRUCTION CO., LTD.
IT IS NOT TO BE COPIED OR USED IN ANY WAY DETRIMENTAL TO THE COMPANY.

Rev.	Date	Prepared	Checked	Approved	Details of Revision
0	05.02.2013	ILSIN	Y.I.MIN	J.S.PARK	FOR CONSTRUCTION

Owner: AES-VCM MONG DUONG POWER COMPANY LIMITED

Consultant: POWER ENGINEERING CONSULTING JOINT STOCK COMPANY 2

Contractor: Doosan Heavy Industries & Construction Co., Ltd.

Project: MONG DUONG II 2x560MW(NET) COAL FIRED POWER PROJECT

Orig-Pc: T10206
PC: XW03

	Date	Name
Drawn	30.04.2012	ILSIN
Checked	30.04.2012	Y.I.MIN
Approved	30.04.2012	J.S.PARK
Dept.		

Scale: NONE

Title: COAL HANDLING SYSTEM RETURN S.A 1200W ASSEMBLY DRAWING

Type: ECC
Contents Code: P0
Reg. No: 625006

Doosan Heavy Industries & Construction Co., Ltd. | Dept. | Unid | Rev. 0 | Version

Drawing No. T10206-XW03-P0ECC00-625006 | Page-No. 1/1

A1 (841 x 594mm)

TRANSITION IDLER 1200W x 5°~25°, MFG. Q'TY = 30 Sets

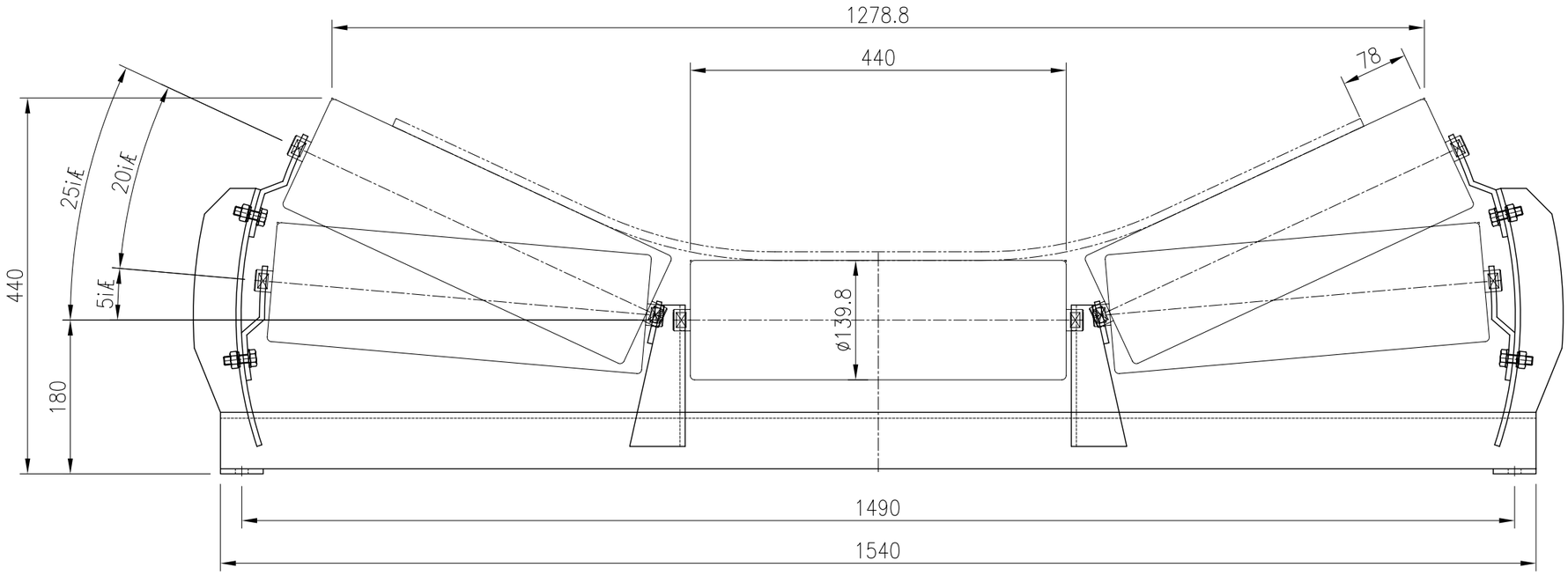

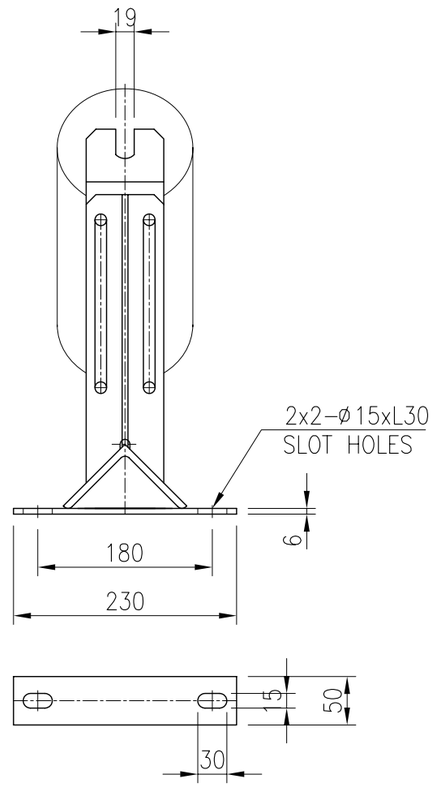

NOTES

1. ROLLER – MAKER STANDARD.
   POWDER COATING.
   (COLOR : BLACK)
2. STAND – HOT DIP GALV. OF ASTM A 123.
   (100μm)
3. BEARING No. – 6205zz

MFG. Q'TY : TOTAL = 30 SETS

ITEM NO.	Q'TY	REF. DWG. NO.
CV-01A	2	T10206-UC02-P0ECC11-623001
CV-01B	2	T10206-UC02-P0ECC12-623002
CV-02A	2	T10206-UC02-P0ECC21-623001
CV-02B	2	T10206-UC02-P0ECC22-623002
CV-03A	3	T10206-UC02-P0ECC31-623001~4
CV-03B	3	T10206-UC02-P0ECC32-623001~4
CV-04A	3	T10206-UC02-P0ECC40-623001~4
CV-04B	3	T10206-UC02-P0ECC40-623001~4
CV-05A	3	T10206-UC02-P0ECC51-623001~6
CV-05B	3	T10206-UC02-P0ECC52-623007~12
CV-06A	2	T10206-UC02-P0ECC61-623001~3
CV-06B	2	T10206-UC02-P0ECC61-623004~6

FOR CONSTRUCTION

THIS DRAWING IS THE PROPERTY OF DOOSAN HEAVY INDUSTRIES & CONSTRUCTION CO., LTD.
IT IS NOT TO BE COPIED OR USED IN ANY WAY DETRIMENTAL TO THE COMPANY.

Rev.	Date	Prepared	Checked	Approved	Details of Revision
1	05.02.2013	ILSIN	Y.I.MIN	J.S.PARK	FOR CONSTRUCTION

Owner: AES-VCM MONG DUONG POWER COMPANY LIMITED

Consultant: POWER ENGINEERING CONSULTING JOINT STOCK COMPANY 2

Contractor: Doosan Heavy Industries & Construction Co., Ltd.

Project: MONG DUONG II 2x560MW(NET) COAL FIRED POWER PROJECT

Orig-Pc: T10206
PC: XW03
Type: ECC
Contents Code: P0

	Date	Name
Drawn	30.04.2012	ILSIN
Checked	30.04.2012	Y.I.MIN
Approved	30.04.2012	J.S.PARK

Scale: NONE

Title: COAL HANDLING SYSTEM TRANSITION IDLER 1200Wx5°~25° ASSEMBLY DRAWING

Reg. No: 625007

Dept.: Doosan Heavy Industries & Construction Co., Ltd.

Dept.:

Unid:

Rev.: 0 Version:

Drawing No.: T10206-XW03-P0ECC00-625007

Page-No.: 1/1

A1 (841 x 594mm)

WEIGHING IDLER 1200W x 35°, MFG. Q'TY = 8 Sets

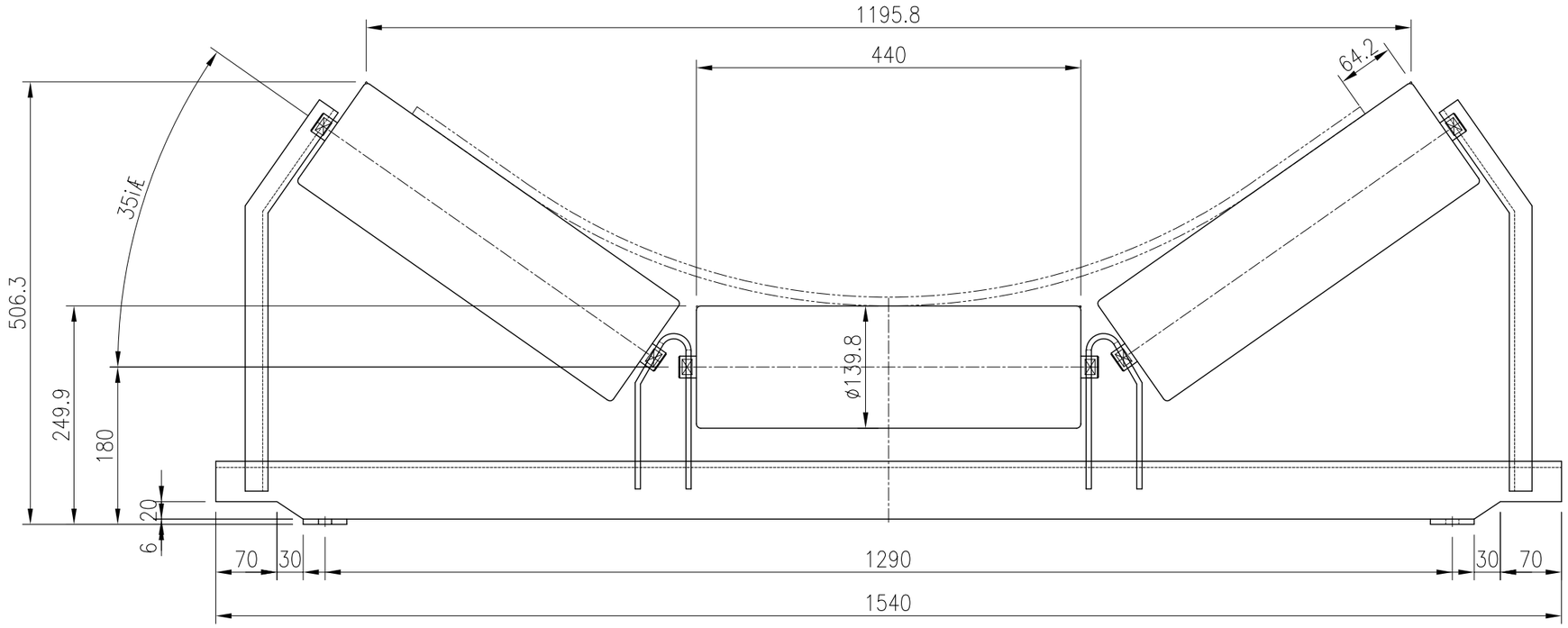

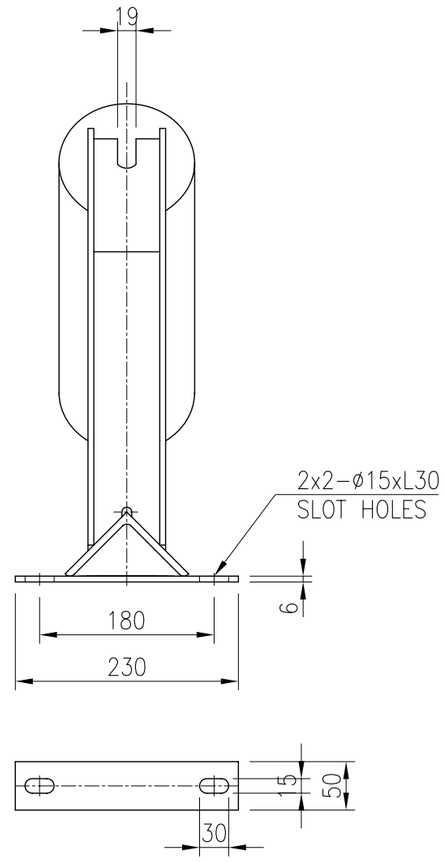

NOTES

1. ROLLER – MAKER STANDARD.
   POWDER COATING.
   (COLOR : RED)
3. STAND – HOT DIP GALV. OF ASTM A 123.
   (100μm)
4. BEARING No. – 6205zz
5. ALL DEMENSION TOLERANCE : ±1. U.N.O
6. ALL ROLLER TO BE MACHINED TO PROVIDE 0.13mm T.I.R.
   MAX. RUNOUT & MALANCED TO 0.014Nm.

MFG. Q'TY : TOTAL = 8 SETS

ITEM NO.	Q'TY	REF. DWG. NO.
CV-01A	2	T10206-UC02-P0ECC11-623001
CV-01B	2	T10206-UC02-P0ECC12-623002
CV-02A	–	T10206-UC02-P0ECC21-623001
CV-02B	–	T10206-UC02-P0ECC22-623002
CV-03A	–	T10206-UC02-P0ECC31-623001~4
CV-03B	–	T10206-UC02-P0ECC32-623001~4
CV-04A	–	T10206-UC02-P0ECC40-623001~4
CV-04B	–	T10206-UC02-P0ECC40-623001~4
CV-05A	2	T10206-UC02-P0ECC51-623001~6
CV-05B	2	T10206-UC02-P0ECC52-623007~12
CV-06A	–	T10206-UC02-P0ECC61-623001~3
CV-06B	–	T10206-UC02-P0ECC61-623004~6

FOR CONSTRUCTION

THIS DRAWING IS THE PROPERTY OF DOOSAN HEAVY INDUSTRIES & CONSTRUCTION CO., LTD.
IT IS NOT TO BE COPIED OR USED IN ANY WAY DETRIMENTAL TO THE COMPANY.

Rev.	Date	Prepared	Checked	Approved	Details of Revision
1	05.02.2013	ILSIN	Y.I.MIN	J.S.PARK	FOR CONSTRUCTION

Owner: AES-VCM MONG DUONG POWER COMPANY LIMITED

Consultant: POWER ENGINEERING CONSULTING JOINT STOCK COMPANY 2

Contractor: Doosan Heavy Industries & Construction Co., Ltd.

Project: MONG DUONG II 2x560MW(NET) COAL FIRED POWER PROJECT

Orig-Pc: T10206
PC: XW03
Type: ECC
Contents Code: P0

	Date	Name
Drawn	30.04.2012	ILSIN
Checked	30.04.2012	Y.I.MIN
Approved	30.04.2012	J.S.PARK
Dept.		

Scale: NONE

Title: COAL HANDLING SYSTEM WEIGHING IDLER 1200Wx35° ASSEMBLY DRAWING

Reg. No: 625008

Doosan Heavy Industries & Construction Co., Ltd. | Dept. | Unid | Rev. 0 | Version

Drawing No. T10206-XW03-P0ECC00-625008 | Page-No. 1/1

A1 (841 x 594mm)

CARRIER IDLER 1400W x 20°, MFG. Q'TY = 12 Sets

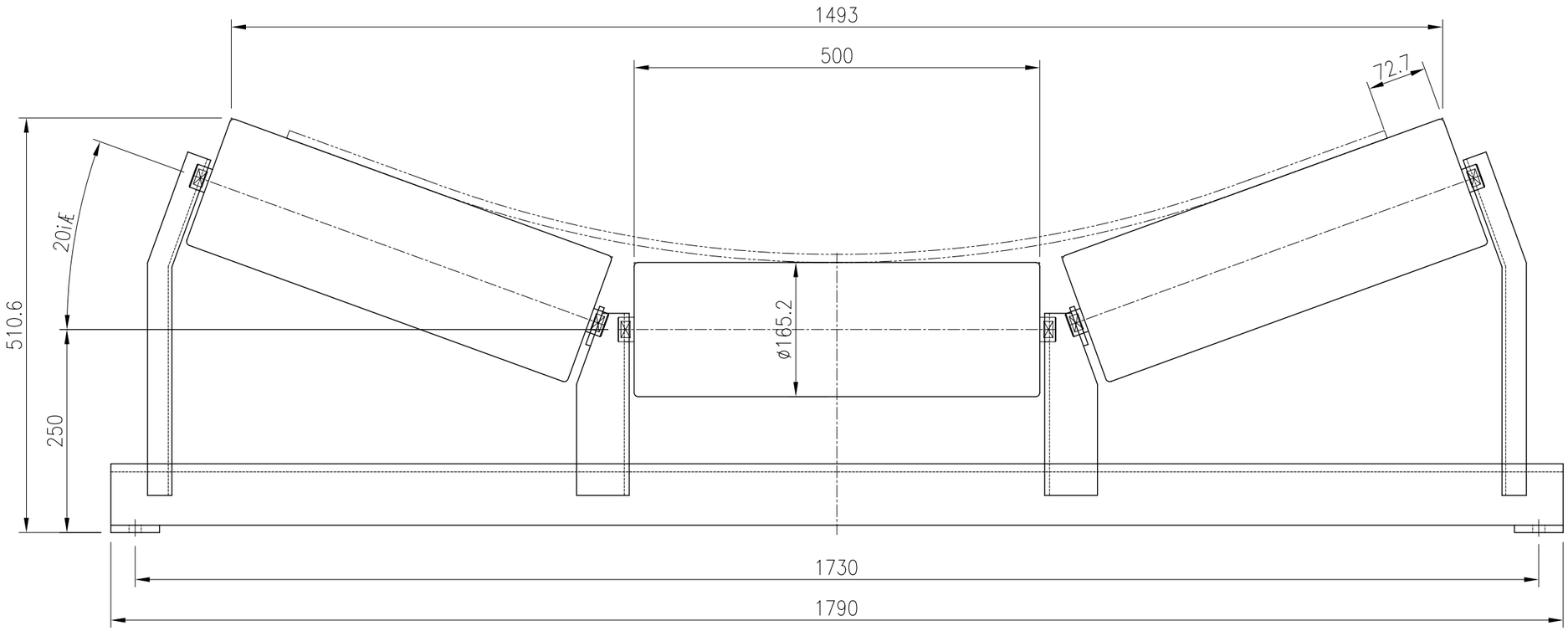

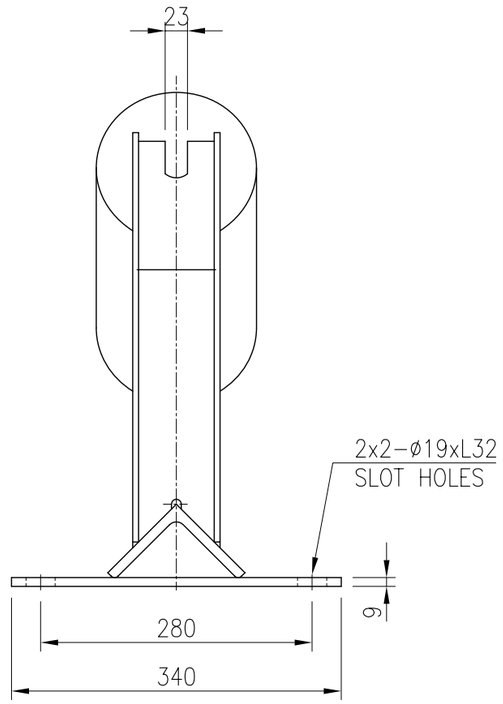

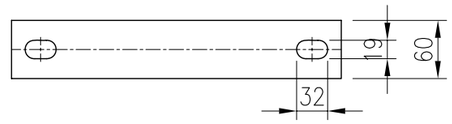

NOTES

1. ROLLER – MAKER STANDARD.
   POWDER COATING.
   (COLOR : BLACK)
2. STAND – HOT DIP GALV. OF ASTM A 123.
   (100μm)
3. BEARING No. – 6206zz

MFG. Q'TY : TOTAL = 12 SETS

ITEM NO.	Q'TY	REF. DWG. NO.
CF-01A	3	T10206-UC02-P0ECC71-623001
CF-01B	9	T10206-UC02-P0ECC72-623002

FOR CONSTRUCTION

THIS DRAWING IS THE PROPERTY OF DOOSAN HEAVY INDUSTRIES & CONSTRUCTION CO., LTD.
IT IS NOT TO BE COPIED OR USED IN ANY WAY DETRIMENTAL TO THE COMPANY.

Rev.	Date	Prepared	Checked	Approved	Details of Revision
1	05.02.2013	ILSIN	Y.I.MIN	J.S.PARK	FOR CONSTRUCTION

Owner: AES-VCM MONG DUONG POWER COMPANY LIMITED

Consultant: POWER ENGINEERING CONSULTING JOINT STOCK COMPANY 2

Contractor: Doosan Heavy Industries & Construction Co., Ltd.

Project: MONG DUONG II 2x560MW(NET) COAL FIRED POWER PROJECT

Orig-Pc: T10206
PC: XW03
Type: ECC
Contents Code: P0

	Date	Name
Drawn	30.04.2012	ILSIN
Checked	30.04.2012	Y.I.MIN
Approved	30.04.2012	J.S.PARK
Dept.		

Scale: NONE

Title: COAL HANDLING SYSTEM CARRIER IDLER 1400Wx20° ASSEMBLY DRAWING

Reg. No: 625009

Doosan Heavy Industries & Construction Co., Ltd. | Dept. | Unid | Rev. 0 | Version

Drawing No. T10206-XW03-P0ECC00-625009 | Page-No. 1/1

A1 (841 x 594mm)

RETURN IDLER 1400W, MFG. Q'TY = 3 Sets

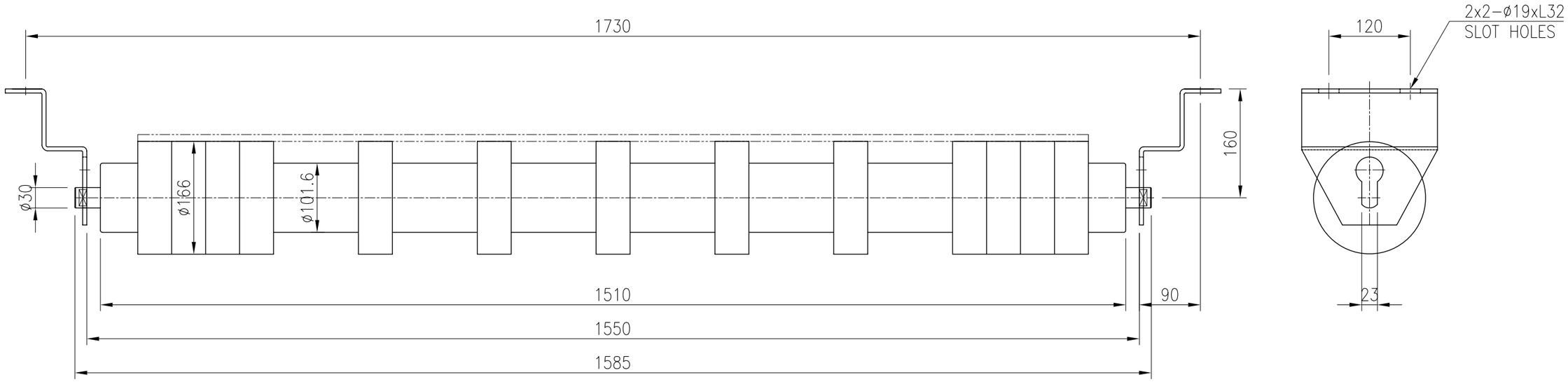

NOTES

1. ROLLER – MAKER STANDARD.
   POWDER COATING.
   (COLOR : BLACK)
2. STAND – HOT DIP GALV. OF ASTM A 123.
   (100μm)
3. BEARING No. – 6206zz
4. RUBBER DISC TYPE.

MFG. Q'TY : TOTAL = 3 SETS

ITEM NO.	Q'TY	REF. DWG. NO.
CF-01A	1	T10206-UC02-P0ECC71-623001
CF-01B	2	T10206-UC02-P0ECC72-623002

FOR CONSTRUCTION

THIS DRAWING IS THE PROPERTY OF DOOSAN HEAVY INDUSTRIES & CONSTRUCTION CO., LTD.
IT IS NOT TO BE COPIED OR USED IN ANY WAY DETRIMENTAL TO THE COMPANY.

Rev.	Date	Prepared	Checked	Approved	Details of Revision
△1	05.02.2013	ILSIN	Y.I.MIN	J.S.PARK	FOR CONSTRUCTION

Owner: AES-VCM MONG DUONG POWER COMPANY LIMITED

Consultant: POWER ENGINEERING CONSULTING JOINT STOCK COMPANY 2

Contractor: Doosan Heavy Industries & Construction Co., Ltd.

Project: MONG DUONG II 2x560MW(NET) COAL FIRED POWER PROJECT

Orig-Pc: T10206
PC: XW03
Type: ECC
Contents Code: P0

	Date	Name
Drawn	30.04.2012	ILSIN
Checked	30.04.2012	Y.I.MIN
Approved	30.04.2012	J.S.PARK
Dept.		

Scale: NONE

Title: COAL HANDLING SYSTEM RETURN IDLER 1400W ASSEMBLY DRAWING

Reg. No: 625010

Doosan Heavy Industries & Construction Co., Ltd. | Dept. | Unid | Rev. 0 | Version

Drawing No. T10206-XW03-P0ECC00-625010 | Page-No. 1/1

A1 (841 x 594mm)

IMPACT IDLER 1400W x 20°, MFG. Q'TY = 9 Sets

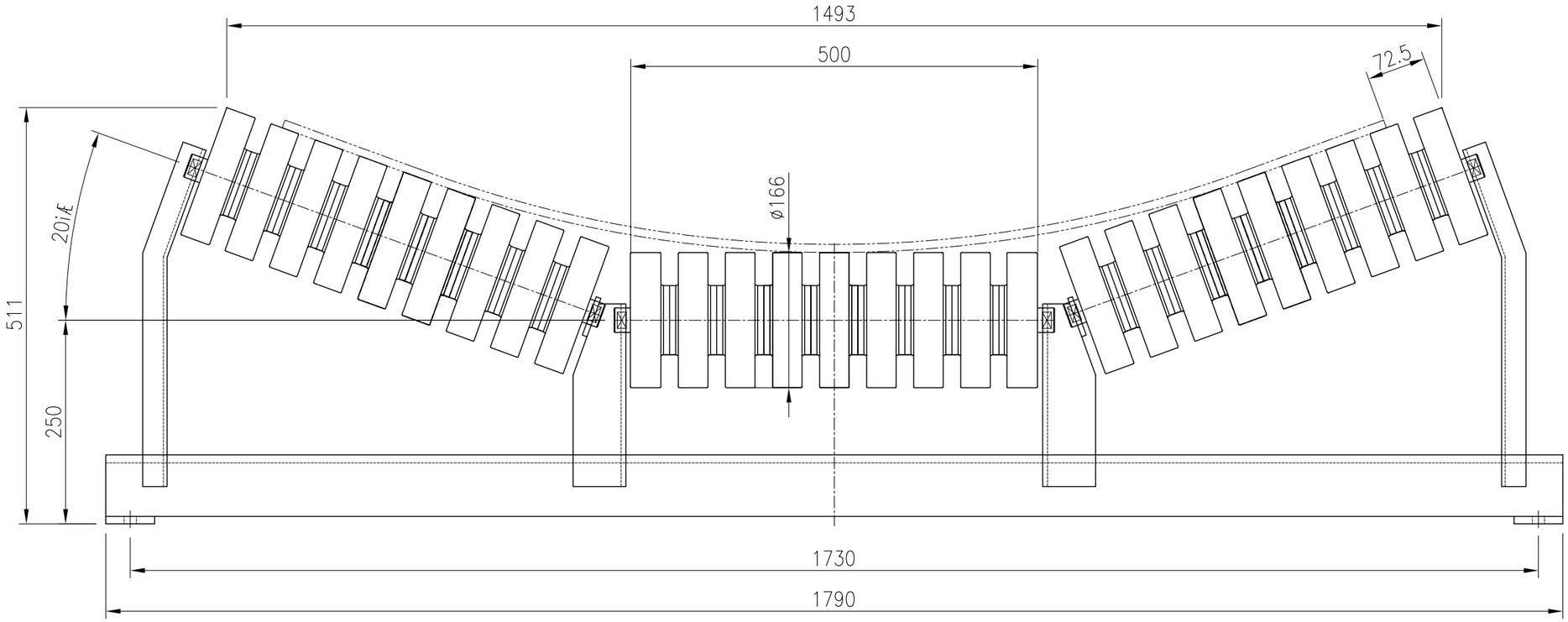

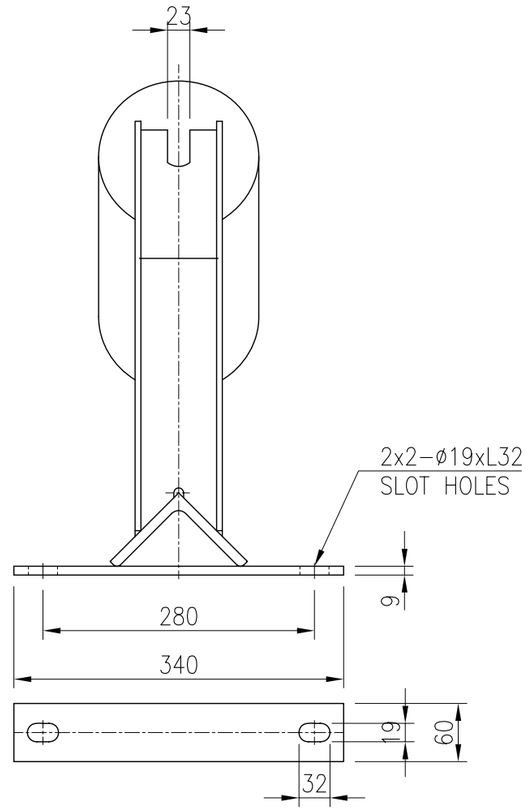

NOTES

1. ROLLER – MAKER STANDARD.
   POWDER COATING.
   (COLOR : BLACK)
2. STAND – HOT DIP GALV. OF ASTM A 123.
   (100μm)
3. BEARING No. – 6206zz

MFG. Q'TY : TOTAL = 9 SETS

ITEM NO.	Q'TY	REF. DWG. NO.
CF-01A	5	T10206-UC02-P0ECC71-623001
CF-01B	4	T10206-UC02-P0ECC72-623002

FOR CONSTRUCTION

THIS DRAWING IS THE PROPERTY OF DOOSAN HEAVY INDUSTRIES & CONSTRUCTION CO., LTD.
IT IS NOT TO BE COPIED OR USED IN ANY WAY DETRIMENTAL TO THE COMPANY.

Rev.	Date	Prepared	Checked	Approved	Details of Revision
1	05.02.2013	ILSIN	Y.I.MIN	J.S.PARK	FOR CONSTRUCTION

Owner: AES-VCM MONG DUONG POWER COMPANY LIMITED

Consultant: POWER ENGINEERING CONSULTING JOINT STOCK COMPANY 2

Contractor: Doosan Heavy Industries & Construction Co., Ltd.

Project: MONG DUONG II 2x560MW(NET) COAL FIRED POWER PROJECT

Orig-Pc: T10206
PC: XW03
Type: ECC
Contents Code: P0

	Date	Name
Drawn	30.04.2012	ILSIN
Checked	30.04.2012	Y.I.MIN
Approved	30.04.2012	J.S.PARK
Dept.		

Scale: NONE

Title: COAL HANDLING SYSTEM IMPACT IDLER 1400Wx20° ASSEMBLY DRAWING

Reg. No: 625011
Rev.: 0
Version:

Doosan Heavy Industries & Construction Co., Ltd.
Dept.
Unid

Drawing No.: T10206-XW03-P0ECC00-625011
Page-No.: 1/1

A1 (841 x 594mm)

CARRIER S.A IDLER 1400W x 20°, MFG. Q'TY = 2 Sets

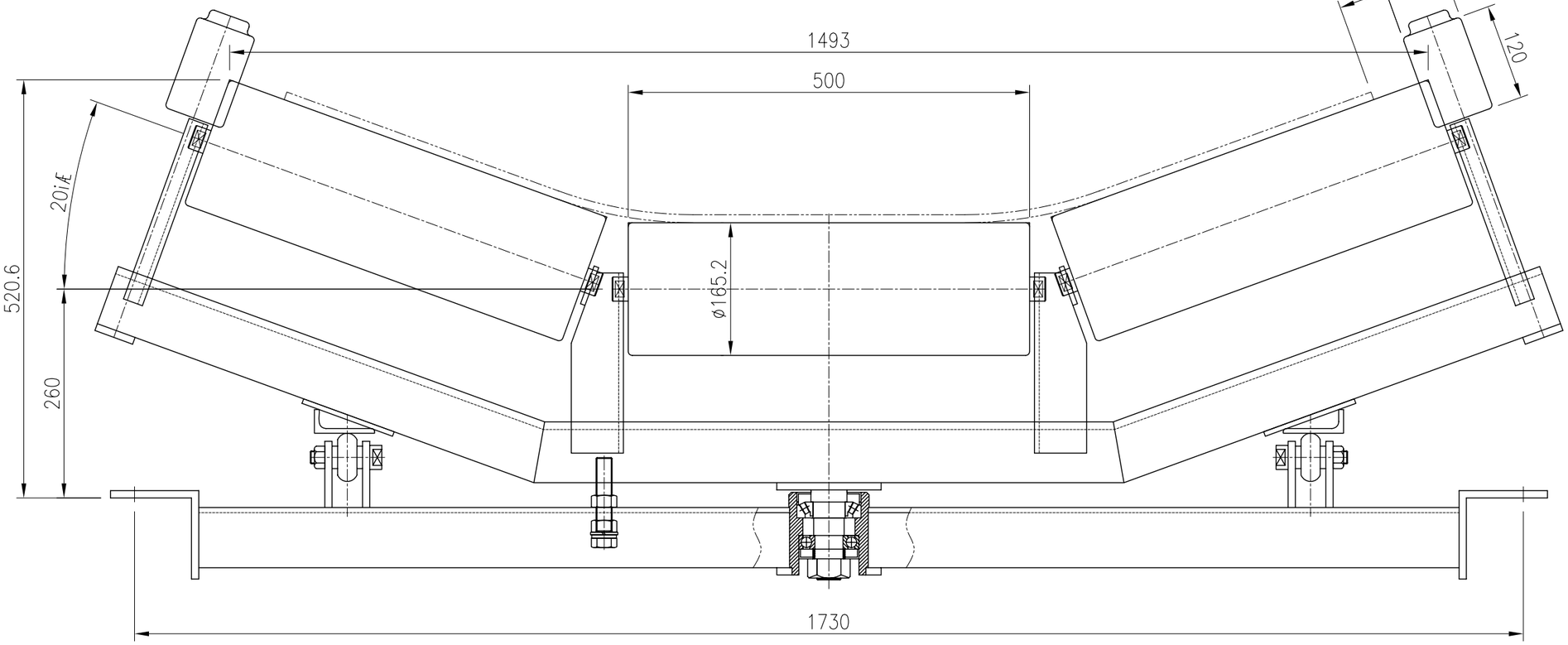

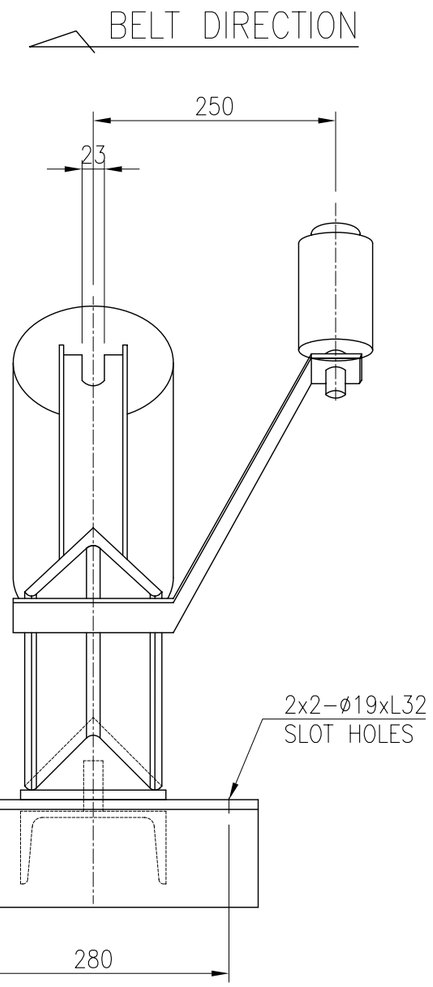

NOTES

1. ROLLER – MAKER STANDARD.
   POWDER COATING.
   (COLOR : BLACK)
2. STAND – HOT DIP GALV. OF ASTM A 123.
   (100μm)
3. BEARING No. – 6206zz
4. TILTING – 5°

MFG. Q'TY : TOTAL = 2 SETS

ITEM NO.	Q'TY	REF. DWG. NO.
CF-01A	1	T10206-UC02-P0ECC71-623001
CF-01B	1	T10206-UC02-P0ECC72-623002

** NOTE : PLEASE CHECK BELT DIRECTION AT FIELD ERECTION.

FOR CONSTRUCTION

THIS DRAWING IS THE PROPERTY OF DOOSAN HEAVY INDUSTRIES & CONSTRUCTION CO., LTD.
IT IS NOT TO BE COPIED OR USED IN ANY WAY DETRIMENTAL TO THE COMPANY.

Rev.	Date	Prepared	Checked	Approved	Details of Revision
0	05.02.2013	ILSIN	Y.I.MIN	J.S.PARK	FOR CONSTRUCTION

Owner: AES-VCM MONG DUONG POWER COMPANY LIMITED

Consultant: POWER ENGINEERING CONSULTING JOINT STOCK COMPANY 2

Contractor: Doosan Heavy Industries & Construction Co., Ltd.

Project: MONG DUONG II 2x560MW(NET) COAL FIRED POWER PROJECT

Orig-Pc: T10206
PC: XW03
Type: ECC
Contents Code: P0

	Date	Name
Drawn	30.04.2012	ILSIN
Checked	30.04.2012	Y.I.MIN
Approved	30.04.2012	J.S.PARK
Dept.		

Scale: NONE

Title: COAL HANDLING SYSTEM
CARRIER S.A 1400Wx20°
ASSEMBLY DRAWING

Reg. No: 625012

Doosan Heavy Industries & Construction Co., Ltd.

Dept.: Unid: Rev.: 0 Version:

Drawing No.: T10206-XW03-P0ECC00-625012

Page-No.: 1/1

A1 (841 x 594mm)

RETRUN S.A IDLER 1400W, MFG. Q'TY = 2 Sets

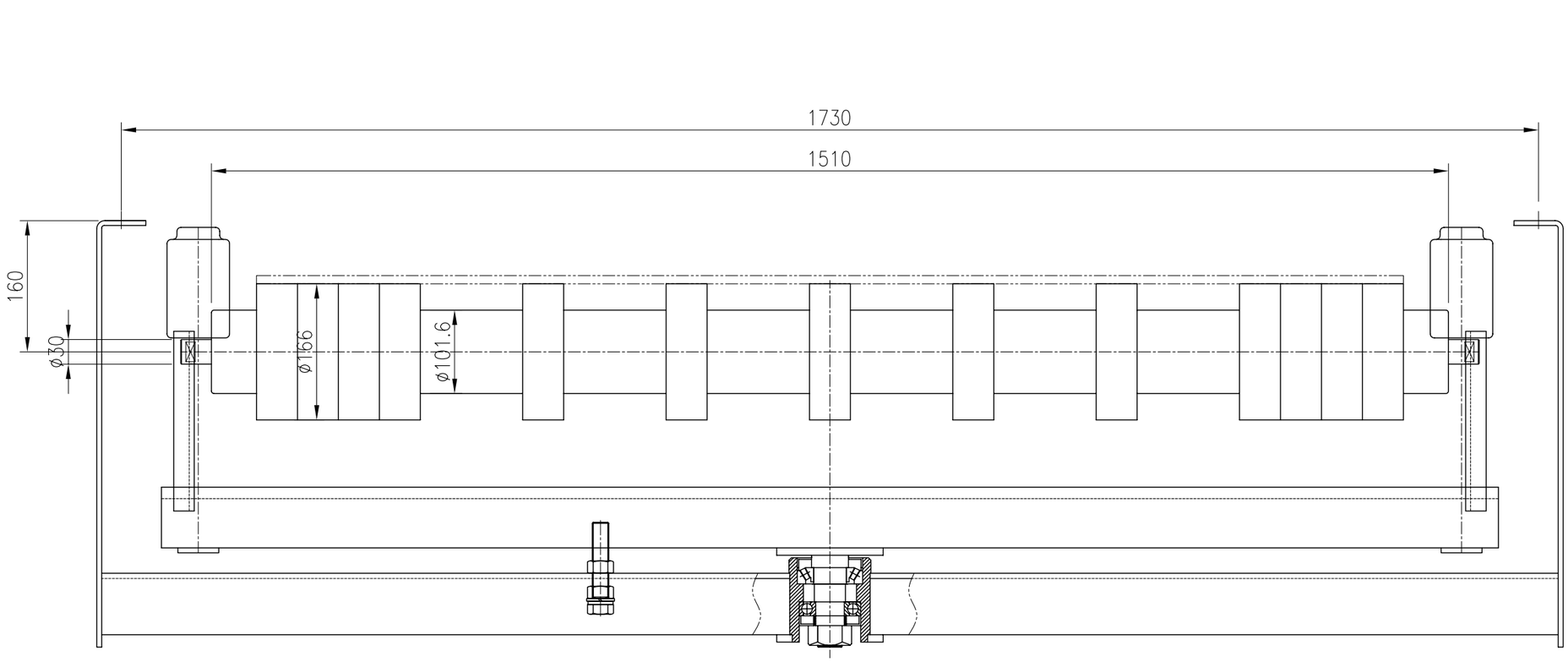

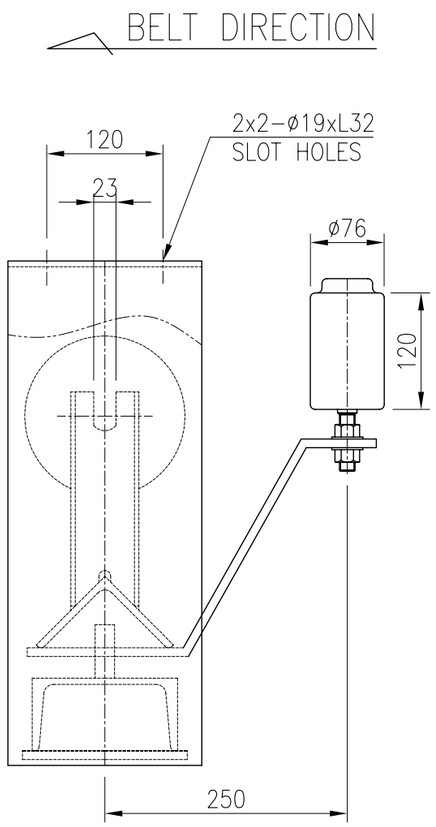

NOTES

1. ROLLER – MAKER STANDARD.
   POWDER COATING.
   (COLOR : BLACK)
2. STAND – HOT DIP GALV. OF ASTM A 123.
   (100μm)
3. BEARING No. – 6206zz
4. RUBBER DISC TYPE.
5. TILTING – 5°

MFG. Q'TY : TOTAL = 2 SETS

ITEM NO.	Q'TY	REF. DWG. NO.
CF-01A	1	T10206-UC02-P0ECC71-623001
CF-01B	1	T10206-UC02-P0ECC72-623002

** NOTE : PLEASE CHECK BELT DIRECTION AT FIELD ERECTION.

FOR CONSTRUCTION

THIS DRAWING IS THE PROPERTY OF DOOSAN HEAVY INDUSTRIES & CONSTRUCTION CO., LTD.
IT IS NOT TO BE COPIED OR USED IN ANY WAY DETRIMENTAL TO THE COMPANY.

Rev.	Date	Prepared	Checked	Approved	Details of Revision
0	05.02.2013	ILSIN	Y.I.MIN	J.S.PARK	FOR CONSTRUCTION

Owner: AES-VCM MONG DUONG POWER COMPANY LIMITED

Consultant: POWER ENGINEERING CONSULTING JOINT STOCK COMPANY 2

Contractor: Doosan Heavy Industries & Construction Co., Ltd.

Project: MONG DUONG II 2x560MW(NET) COAL FIRED POWER PROJECT

Orig-Pc: T10206
PC: XW03
Type: ECC

	Date	Name
Drawn	30.04.2012	ILSIN
Checked	30.04.2012	Y.I.MIN
Approved	30.04.2012	J.S.PARK
Dept.		

Scale: NONE

Title: COAL HANDLING SYSTEM RETURN S.A 1400W ASSEMBLY DRAWING

Contents Code: P0

Reg. No: 625013

Rev.: 0 Version:

Doosan Heavy Industries & Construction Co., Ltd. Dept. Unid

Drawing No.: T10206-XW03-P0ECC00-625013

Page-No.: 1/1

A1 (841 x 594mm)

TRANSITION IDLER 1400W x 5°~20°, MFG. Q'TY = 4 Sets

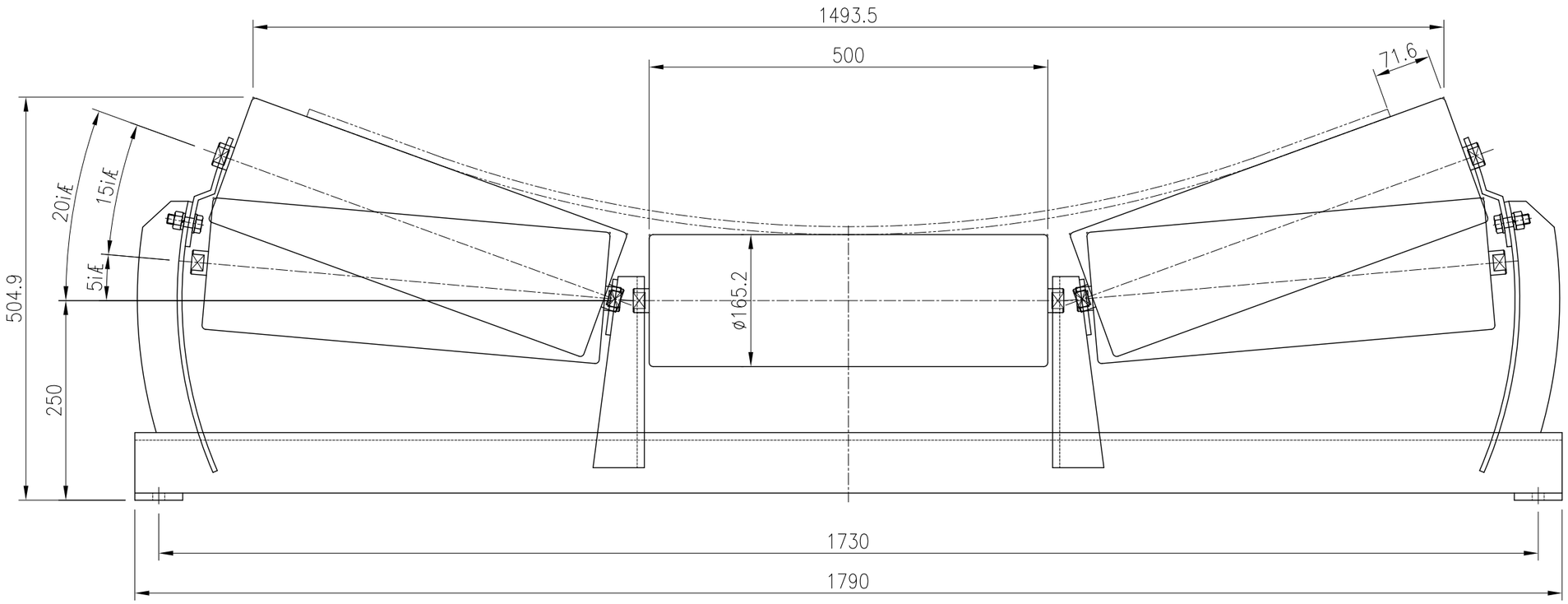

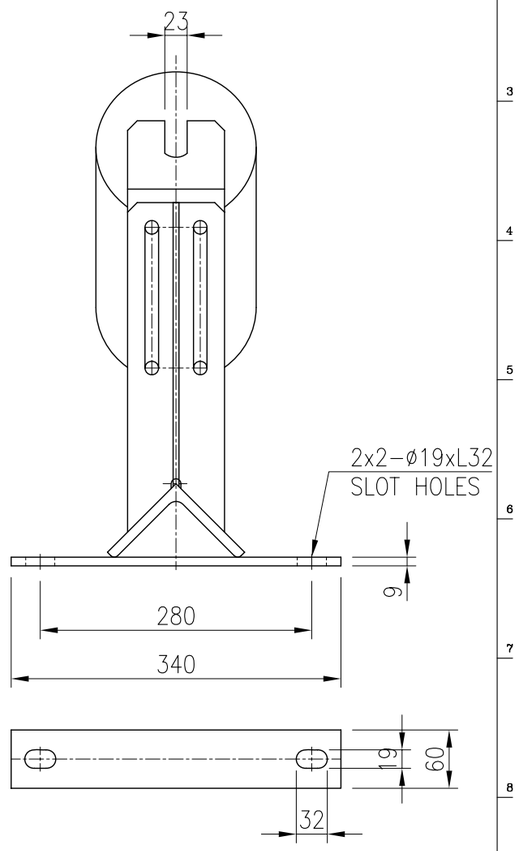

NOTES

1. ROLLER – MAKER STANDARD.
   POWDER COATING.
   (COLOR : BLACK)
2. STAND – HOT DIP GALV. OF ASTM A 123.
   (100μm)
3. BEARING No. – 6206zz

MFG. Q'TY : TOTAL = 4 SETS

ITEM NO.	Q'TY	REF. DWG. NO.
CF-01A	2	T10206-UC02-P0ECC71-623001
CF-01B	2	T10206-UC02-P0ECC72-623002

FOR CONSTRUCTION

THIS DRAWING IS THE PROPERTY OF DOOSAN HEAVY INDUSTRIES & CONSTRUCTION CO., LTD.
IT IS NOT TO BE COPIED OR USED IN ANY WAY DETRIMENTAL TO THE COMPANY.

Rev.	Date	Prepared	Checked	Approved	Details of Revision
1	05.02.2013	ILSIN	Y.I.MIN	J.S.PARK	FOR CONSTRUCTION

Owner: AES-VCM MONG DUONG POWER COMPANY LIMITED

Consultant: POWER ENGINEERING CONSULTING JOINT STOCK COMPANY 2

Contractor: Doosan Heavy Industries & Construction Co., Ltd.

Project: MONG DUONG II 2x560MW(NET) COAL FIRED POWER PROJECT

Orig-Pc: T10206
PC: XW03
Type: ECC
Contents Code: P0

	Date	Name
Drawn	30.04.2012	ILSIN
Checked	30.04.2012	Y.I.MIN
Approved	30.04.2012	J.S.PARK
Dept.		

Scale: NONE

Title: COAL HANDLING SYSTEM
TRANSITION IDLER
1400Wx5°~25°
ASSEMBLY DRAWING

Reg. No: 625014

Doosan Heavy Industries & Construction Co., Ltd. | Dept. | Unid | Rev. 0 | Version

Drawing No.: T10206-XW03-P0ECC00-625014

Page-No.: 1/1

A1 (841 x 594mm)

CARRIER IDLER 1200W x 45°, MFG. Q'TY = 8 Sets

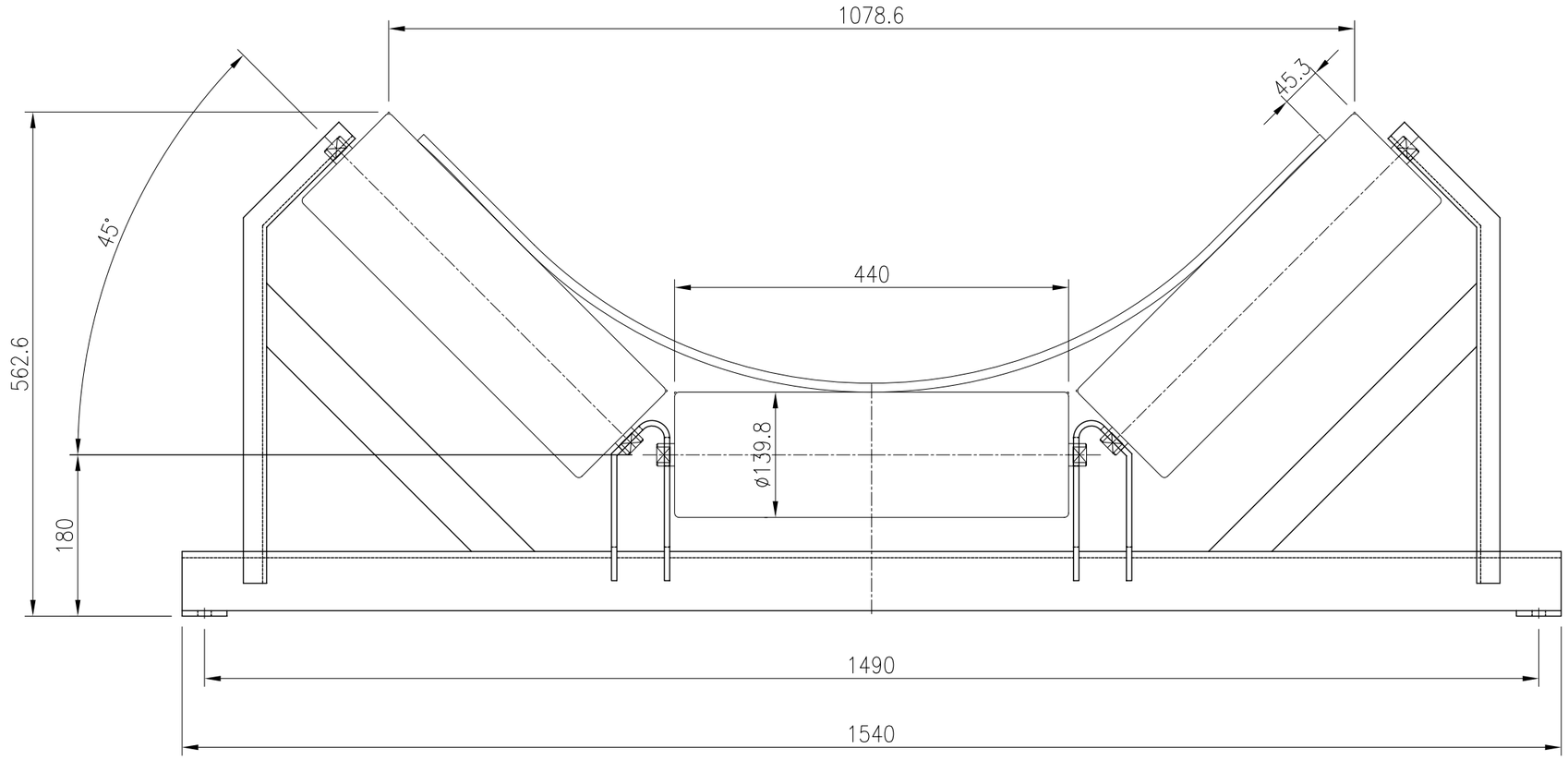

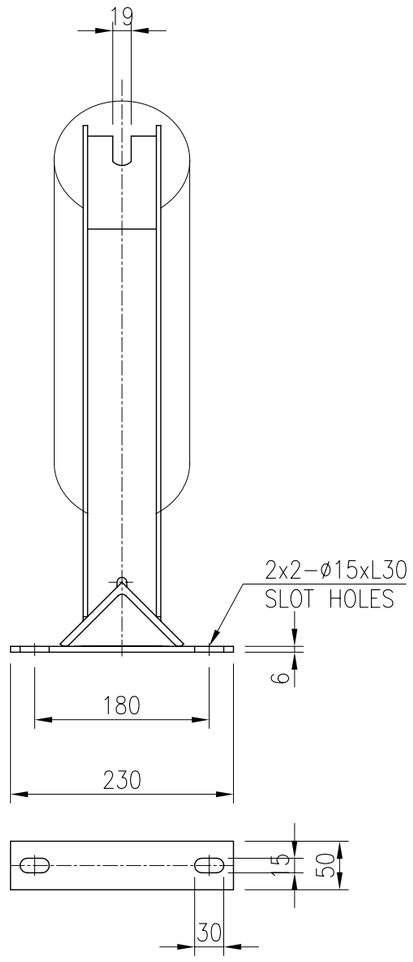

FOR CONSTRUCTION

NOTES

1. ROLLER – MAKER STANDARD.
   POWDER COATING.
   (COLOR : BLACK)
2. STAND – HOT DIP GALV. OF ASTM A 123.
   (100μm)
3. BEARING No. – 6206zz

MFG. Q'TY : TOTAL = 8 SETS

ITEM NO.	Q'TY	REF. DWG. NO.
CV-05A	4	T10206-UC02-P0ECC51-623001~6
CV-05B	4	T10206-UC02-P0ECC52-623007~12

THIS DRAWING IS THE PROPERTY OF DOOSAN HEAVY INDUSTRIES & CONSTRUCTION CO., LTD.
IT IS NOT TO BE COPIED OR USED IN ANY WAY DETRIMENTAL TO THE COMPANY.

Rev.	Date	Prepared	Checked	Approved	Details of Revision
0	05.02.2013	ILSIN	Y.I.MIN	J.S.PARK	FOR CONSTRUCTION

Owner: AES-VCM MONG DUONG POWER COMPANY LIMITED

Consultant: POWER ENGINEERING CONSULTING JOINT STOCK COMPANY 2

Contractor: Doosan Heavy Industries & Construction Co., Ltd.

Project: MONG DUONG II 2x560MW(NET) COAL FIRED POWER PROJECT

	Date	Name
Drawn	30.04.2012	ILSIN
Checked	30.04.2012	Y.I.MIN
Approved	30.04.2012	J.S.PARK
Dept.		

Scale: NONE

Title: COAL HANDLING SYSTEM CARRIER IDLER 1200Wx45° ASSEMBLY DRAWING

Doosan Heavy Industries & Construction Co., Ltd.

Dept. | Unid

Drawing No. T10206-XW03-P0ECC00-625015

Orig-Pc: T10206
PC: XW03
Type: ECC
Contents Code: P0
Reg. No: 625015
Rev.: 0
Version:
Page-No.: 1/1

A1 (841 x 594mm)

TRANSITION IDLER 1200W x 20°~45°, MFG. Q'TY = 8 Sets

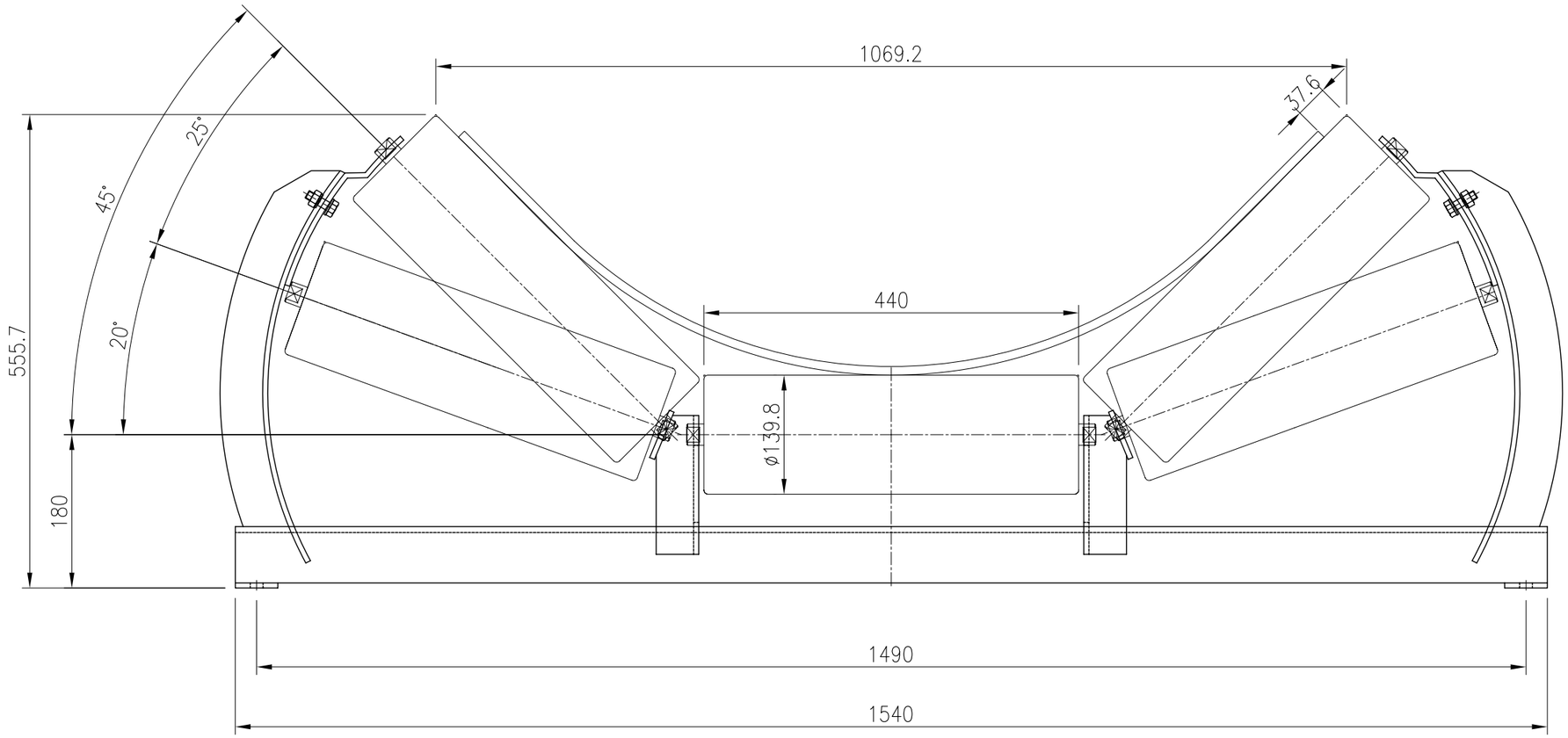

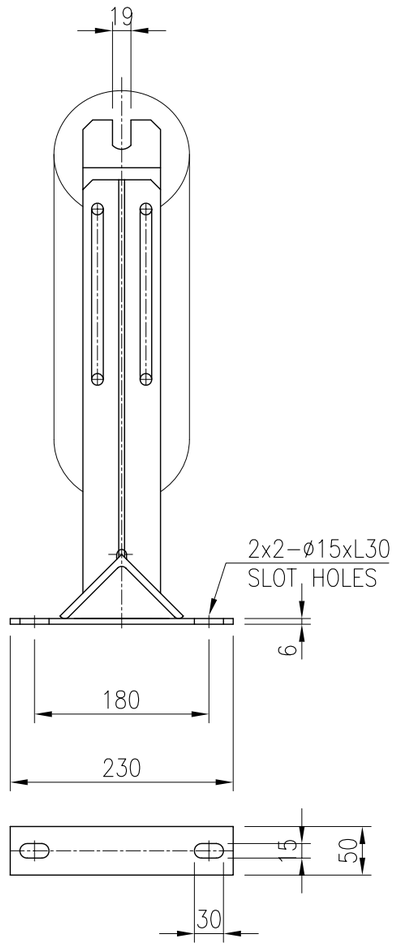

FOR CONSTRUCTION

NOTES

1. ROLLER – MAKER STANDARD.
   POWDER COATING.
   (COLOR : BLACK)
2. STAND – HOT DIP GALV. OF ASTM A 123.
   (100μm)
3. BEARING No. – 6206zz

MFG. Q'TY : TOTAL = 8 SETS

ITEM NO.	Q'TY	REF. DWG. NO.
CV-05A	4	T10206-UC02-P0ECC51-623001~6
CV-05B	4	T10206-UC02-P0ECC52-623007~12

THIS DRAWING IS THE PROPERTY OF DOOSAN HEAVY INDUSTRIES & CONSTRUCTION CO., LTD.
IT IS NOT TO BE COPIED OR USED IN ANY WAY DETRIMENTAL TO THE COMPANY.

Rev.	Date	Prepared	Checked	Approved	Details of Revision
1	05.02.2013	ILSIN	Y.I.MIN	J.S.PARK	FOR CONSTRUCTION

Owner: AES-VCM MONG DUONG POWER COMPANY LIMITED

Consultant: POWER ENGINEERING CONSULTING JOINT STOCK COMPANY 2

Contractor: Doosan Heavy Industries & Construction Co., Ltd.

Project: MONG DUONG II 2x560MW(NET) COAL FIRED POWER PROJECT

Orig-Pc: T10206
PC: XW03
Type: ECC
Contents Code: P0

	Date	Name
Drawn	30.04.2012	ILSIN
Checked	30.04.2012	Y.I.MIN
Approved	30.04.2012	J.S.PARK
Dept.		

Scale: NONE

Title: COAL HANDLING SYSTEM TRANSITION IDLER 1200Wx20°~45° ASSEMBLY DRAWING

Reg. No: 625016

Doosan Heavy Industries & Construction Co., Ltd. | Dept. | Unid | Rev. 0 | Version

Drawing No. T10206-XW03-P0ECC00-625016 | Page-No. 1/1

A1 (841 x 594mm)

7. CONVEYOR BELT CLEANER

A0 (841 x 1189mm)

DRAWING LIST

NO	DWG. NO	DWG. TITLE	REVISION						REMARK	NO	DWG. NO	DWG. TITLE	REVISION						REMARK
			0	1	2	3	4	5					0	1	2	3	4	5	
1	T10206-XW03-P0ECC00-625061	COAL HANDLING SYSTEM PRIMARY BELT CLEANER ASSEMBLY DRSWING (BW=1200)	2013-02-05																
2	T10206-XW03-P0ECC00-625062	COAL HANDLING SYSTEM PRIMARY BELT CLEANER ASSEMBLY DRSWING (BW=1200)	2013-02-05																
3	T10206-XW03-P0ECC00-625063	COAL HANDLING SYSTEM PRIMARY BELT CLEANER ASSEMBLY DRSWING (BW=1400)	2013-02-05																
4	T10206-XW03-P0ECC00-625064	COAL HANDLING SYSTEM SECONDARY BELT CLEANER ASSEMBLY DRSWING (BW=1200)	2013-02-05																
5	T10206-XW03-P0ECC00-625065	COAL HANDLING SYSTEM SECONDARY BELT CLEANER ASSEMBLY DRSWING (BW=1200)	2013-02-05																
6	T10206-XW03-P0ECC00-625066	COAL HANDLING SYSTEM SECONDARY BELT CLEANER ASSEMBLY DRSWING (BW=1400)	2013-02-05																

NO.	DECCRIPTION	MAT'L	Q'TY	TOTAL WEIGHT (Kg)		REMARK
				UNIT	TOTAL	
1	Scraper	urethane	6			190mm
2	AL Profile	AL	1			
3	Cleaner body	STPG38#80	1			□-Pipe60.5+40A
4	Bearing	SS400	2			
5	Bearing mounting bolt	SUS304	4			M12x35 SW.N
6	Set bolt	SUS304	4			M16x30 N
7	Pressure lever	SS400	2			
8	Bracket	SS400	2			L-65X65X6T
9	Pressure adjustment bolt	SUS304	2			M16x250 N

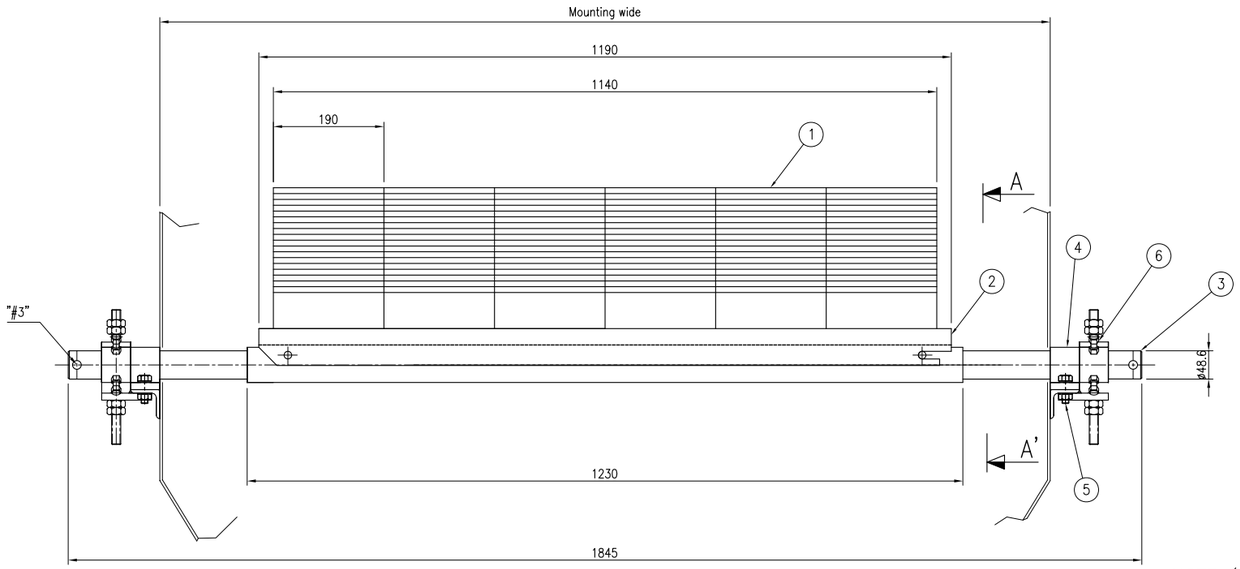

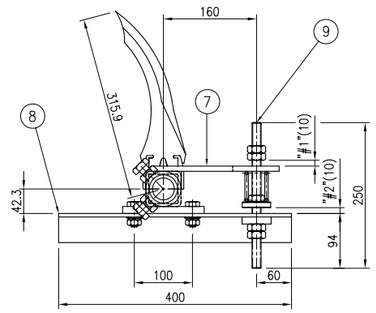

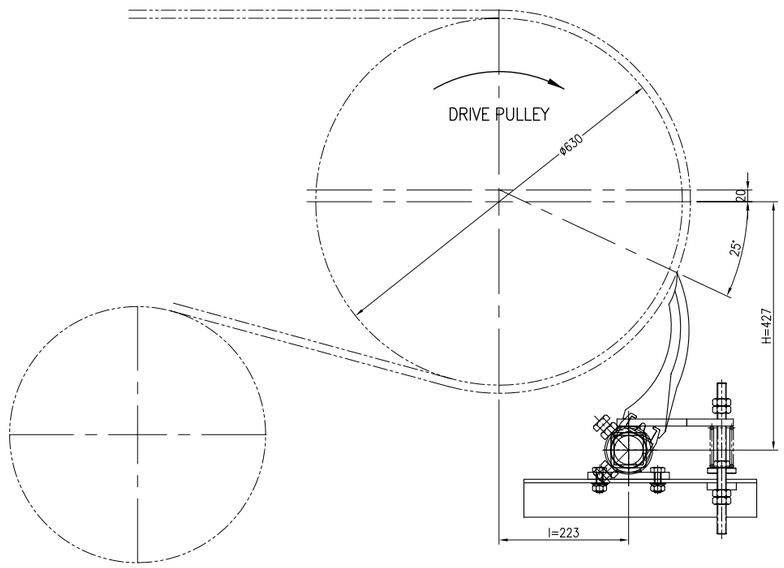

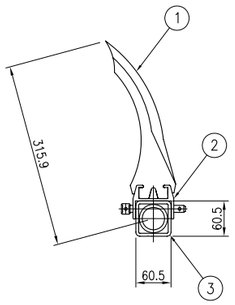

SECTION:A-A'

NOTE. (설치시 주의사항.)

1. #1&#2 : 10mm GAP SHOULD BE KEPT AT INSTALLATION.
   (MAX. WORNOUT RANGE OF TIP IS MAX. 10mm)
2. #1&#2 : ADJUSTING METHOD OF 10mm GAP
   -> MAKE 10mm GAP BETWEEN PRESSURE LEVER AND STOPPER NUT
      BY ROATING OF THE BOLT.
3. #3 : END BOLT
   -> ONLY FOR HANGING IN PAINTING WORK AT SHOP
   -> WHEN SET UP, IT IS FOR CONVENIENCE OF MOVING OR INSTALLATION
4. DIMENSION "H" & "l" SHOULD BE KEPT AT INSTALLATION.
   BELT CLEANER SHOULD BE INSTALLED AS SHOWN BELOW.

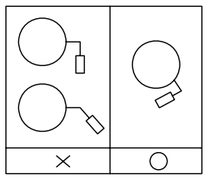

MFG. Q'TY : TOTAL = 10 SETS

ITEM NO.	Q'TY	REF. DWG. NO.
CV-01A	1	T10206-UC02-P0ECC11-623301
CV-01B	1	T10206-UC02-P0ECC11-623302
CV-02A	1	T10206-UC02-P0ECC21-623301
CV-02B	1	T10206-UC02-P0ECC22-623301
CV-06A	1	T10206-UC02-P0ECC60-623301
CV-06B	1	T10206-UC02-P0ECC60-623301
TR-01A	1	-
TR-01B	1	-
TR-02A	1	-
TR-02B	1	-

FOR CONSTRUCTION

THIS DRAWING IS THE PROPERTY OF DOOSAN HEAVY INDUSTRIES & CONSTRUCTION CO., LTD.
IT IS NOT TO BE COPIED OR USED IN ANY WAY DETRIMENTAL TO THE COMPANY.

Rev.	Date	Prepared	Checked	Approved	Details of Revision
0	05.02.2013	ILSIN	Y.I.MIN	J.S.PARK	FOR CONSTRUCTION

Owner: AES-VCM MONG DUONG POWER COMPANY LIMITED

Consultant: POWER ENGINEERING CONSULTING JOINT STOCK COMPANY 2

Contractor: Doosan Heavy Industries & Construction Co., Ltd.

Project: MONG DUONG II 2x560MW(NET) COAL FIRED POWER PROJECT

Orig-Pc: T10206
PC: XW03
Type: ECC
Contents Code: P0

	Date	Name
Drawn	30.04.2012	ILSIN
Checked	30.04.2012	Y.I.MIN
Approved	30.04.2012	J.S.PARK

Scale: NONE

Title: COAL HANDLING SYSTEM PRIMARY BELT CLEANER ASSEMBLY DRAWING (BW=1200)

Reg. No: 625061

Doosan Heavy Industries & Construction Co., Ltd. | Dept. | Unit | Rev. 0 | Version

Drawing No. T10206-XW03-P0ECC00-625061

Page-No. 1/1

KEC

ULTRA CLEANER
("PAU" type B/W1200)

KOREA ENGINEERING CORPORATION

			DATE	REV.
DESIGNED	H.S.PARK			0
DRAWN	H.S.PARK			
CHECKED	J.W.JEH	DWG. NO :		

A1 (841 x 594mm)

NO.	DECCRIPTION	MAT'L	Q'TY	TOTAL WEIGHT (Kg) UNIT	TOTAL	REMARK
1	Scraper	urethane	6			190mm
2	AL Profile	AL	1			
3	Cleaner body	STPG38#80	1			□-Pipe60.5+40A
4	Bearing	SS400	2			
5	Bearing mounting bolt	SUS304	4			M12x35 SW.N
6	Set bolt	SUS304	4			M16x30 N
7	Pressure lever	SS400	2			
8	Bracket	SS400	2			L-65X65X6T
9	Pressure adjustment bolt	SUS304	2			M16x250 N

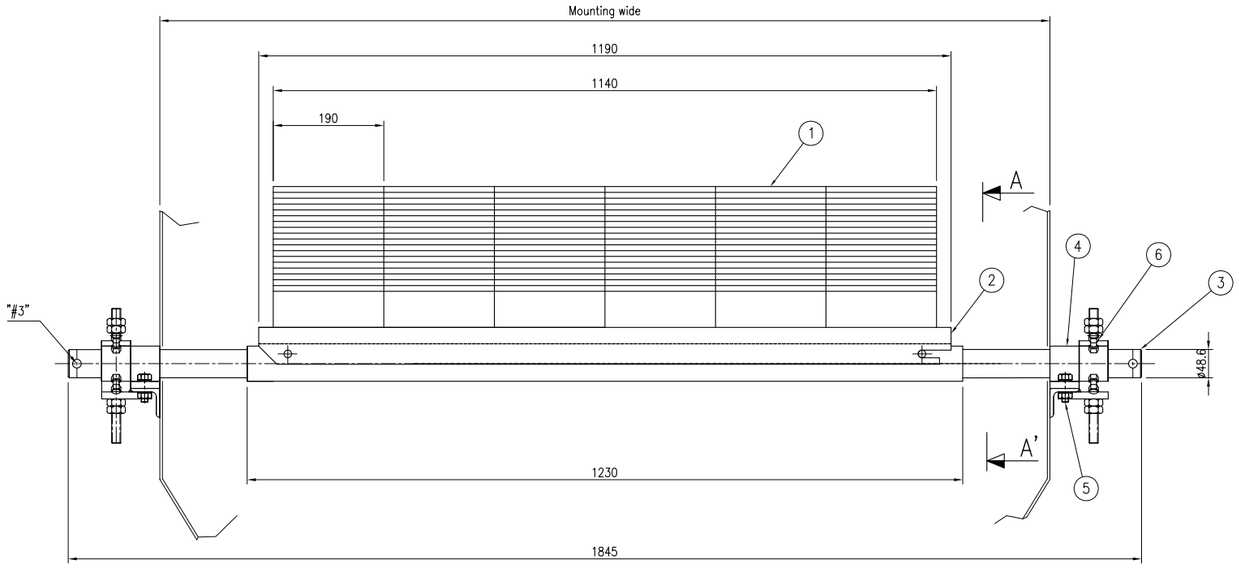

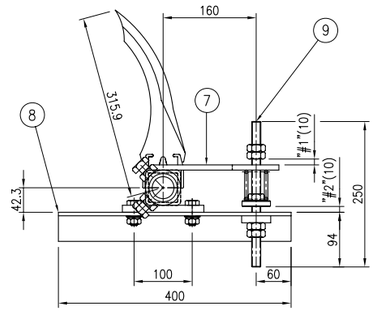

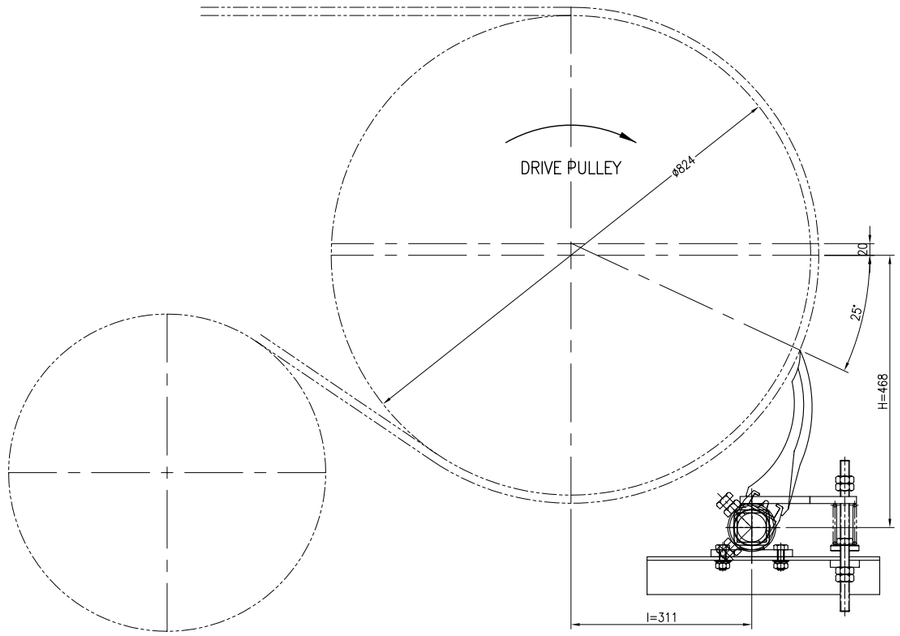

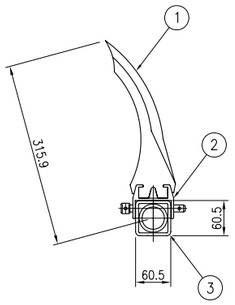

SECTION:A-A'

NOTE. (설치시 주의사항.)

1. #1&#2 : 10mm GAP SHOULD BE KEPT AT INSTALLATION.
   (MAX. WORNOUT RANGE OF TIP IS MAX. 10mm)
2. #1&#2 : ADJUSTING METHOD OF 10mm GAP
   -> MAKE 10mm GAP BETWEEN PRESSURE LEVER AND STOPPER NUT BY ROATING OF THE BOLT.
3. #3 : END BOLT
   -> ONLY FOR HANGING IN PAINTING WORK AT SHOP
   -> WHEN SET UP, IT IS FOR CONVENIENCE OF MOVING OR INSTALLATION
4. DIMENSION "H" & "I" SHOULD BE KEPT AT INSTALLATION.
   BELT CLEANER SHOULD BE INSTALLED AS SHOWN BELOW.

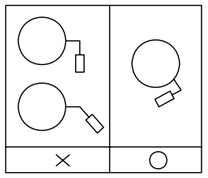

MFG. Q'TY : TOTAL = 4 SETS

ITEM NO.	Q'TY	REF. DWG. NO.
CV-04A	1	T10206-UC02-P0ECC40-623031
CV-04B	1	T10206-UC02-P0ECC40-623031
CV-05A	1	T10206-UC02-P0ECC51-623301
CV-05B	1	T10206-UC02-P0ECC52-623302

FOR CONSTRUCTION

THIS DRAWING IS THE PROPERTY OF DOOSAN HEAVY INDUSTRIES & CONSTRUCTION CO., LTD.
IT IS NOT TO BE COPIED OR USED IN ANY WAY DETRIMENTAL TO THE COMPANY.

Rev.	Date	Prepared	Checked	Approved	Details of Revision
0	05.02.2013	ILSIN	Y.I.MIN	J.S.PARK	FOR CONSTRUCTION

KEC

ULTRA CLEANER
("PAU" type B/W1200)

KOREA ENGINEERING CORPORATION

			DATE	REV.
DESIGNED	H.S.PARK			0
DRAWN	H.S.PARK			
CHECKED	J.W.JEH	DWG. NO :		

Owner: AES-VCM MONG DUONG POWER COMPANY LIMITED

Consultant: POWER ENGINEERING CONSULTING JOINT STOCK COMPANY 2

Contractor: Doosan Heavy Industries & Construction Co., Ltd.

Project: MONG DUONG II 2x560MW(NET) COAL FIRED POWER PROJECT

Orig-Pc: T10206
PC: XW03

	Date	Name
Drawn	30.04.2012	ILSIN
Checked	30.04.2012	Y.I.MIN
Approved	30.04.2012	J.S.PARK
Dept.		

Scale: NONE

Title: COAL HANDLING SYSTEM PRIMARY BELT CLEANER ASSEMBLY DRAWING (BW=1200)

Type: ECC
Contents Code: P0
Reg. No: 625062
Rev.: 0
Version:
Dept.:
Unid:
Doosan Heavy Industries & Construction Co., Ltd.
Drawing No.: T10206-XW03-P0ECC00-625062
Page-No.: 1/1

A1 (841 x 594mm)

NO.	DECCRIPTION	MAT'L	Q'TY	TOTAL WEIGHT (Kg)		REMARK
				UNIT	TOTAL	
1	Scraper	urethane	7			190mm
2	AL Profile	AL	1			
3	Cleaner body	STPG38#80	1			□-Pipe60.5+40A
4	Bearing	SS400	2			
5	Bearing mounting bolt	SUS304	4			M12x35 SW.N
6	Set bolt	SUS304	4			M16x30 N
7	Pressure lever	SS400	2			
8	Bracket	SS400	2			L-65X65X6T
9	Pressure adjustment bolt	SUS304	2			M16x250 N

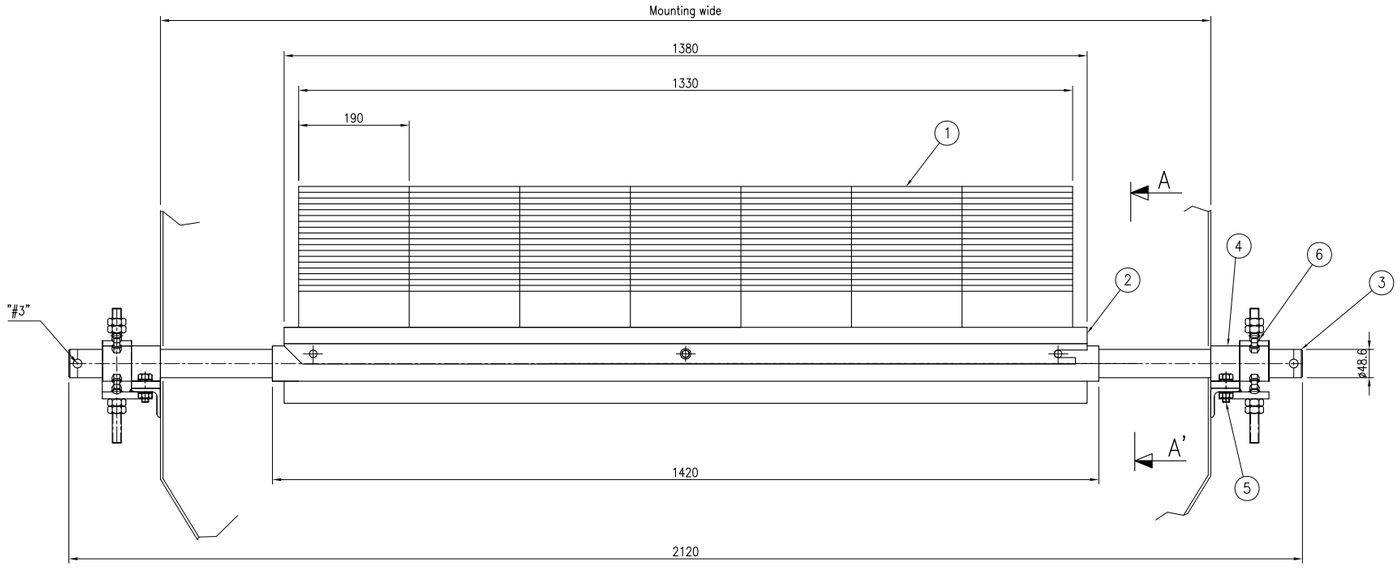

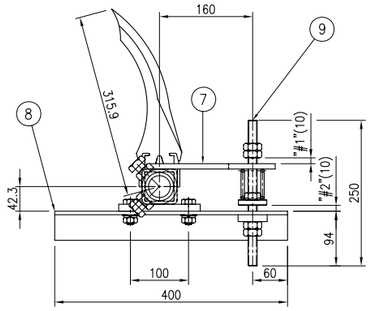

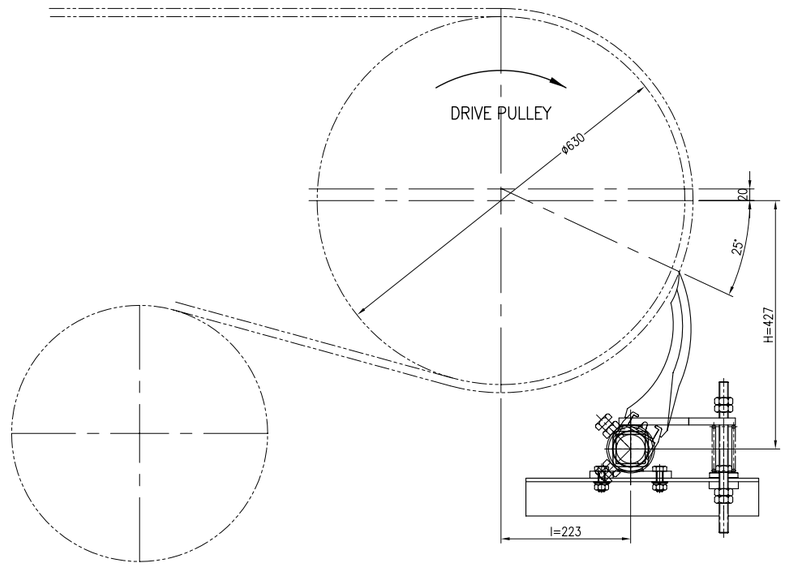

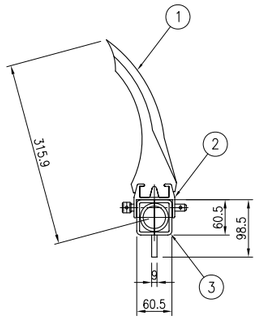

SECTION:A-A'

NOTE. (설치시 주의사항.)

1. #1&#2 : 10mm GAP SHOULD BE KEPT AT INSTALLATION.
   (MAX. WORNOUT RANGE OF TIP IS MAX. 10mm)
2. #1&#2 : ADJUSTING METHOD OF 10mm GAP
   -> MAKE 10mm GAP BETWEEN PRESSURE LEVER AND STOPPER NUT
   BY ROATING OF THE BOLT.
3. #3 : END BOLT
   -> ONLY FOR HANGING IN PAINTING WORK AT SHOP
   -> WHEN SET UP, IT IS FOR CONVENIENCE OF MOVING OR INSTALLATION
4. DIMENSION "H" & "I" SHOULD BE KEPT AT INSTALLATION.
   BELT CLEANER SHOULD BE INSTALLED AS SHOWN BELOW.

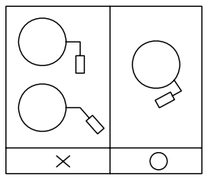

MFG. Q'TY : TOTAL = 2 SETS

ITEM NO.	Q'TY	REF. DWG. NO.
CF-01A	1	T10206-UC02-P0ECC71-623301
CF-01B	1	T10206-UC02-P0ECC72-623302

FOR CONSTRUCTION

THIS DRAWING IS THE PROPERTY OF DOOSAN HEAVY INDUSTRIES & CONSTRUCTION CO., LTD.
IT IS NOT TO BE COPIED OR USED IN ANY WAY DETRIMENTAL TO THE COMPANY.

Rev.	Date	Prepared	Checked	Approved	Details of Revision
0	05.02.2013	ILSIN	Y.I.MIN	J.S.PARK	FOR CONSTRUCTION

KEC

ULTRA CLEANER
("XPAU" type B/W1400)

KOREA ENGINEERING CORPORATION

			DATE	REV.
DESIGNED	H.S.PARK			0
DRAWN	H.S.PARK			
CHECKED	J.W.JEH	DWG. NO :		

Owner: AES-VCM MONG DUONG POWER COMPANY LIMITED

Consultant: POWER ENGINEERING CONSULTING JOINT STOCK COMPANY 2

Contractor: Doosan Heavy Industries & Construction Co., Ltd.

Project: MONG DUONG II 2x560MW(NET) COAL FIRED POWER PROJECT

Orig-Pc: T10206
PC: XW03
Type: ECC
Contents Code: P0

	Date	Name
Drawn	30.04.2012	ILSIN
Checked	30.04.2012	Y.I.MIN
Approved	30.04.2012	J.S.PARK
Dept.		

Scale: NONE

Title: COAL HANDLING SYSTEM PRIMARY BELT CLEANER ASSEMBLY DRAWING (BW=1400)

Reg. No: 625063

Doosan Heavy Industries & Construction Co., Ltd. | Dept. | Unid | Rev. 0 | Version

Drawing No. T10206-XW03-P0ECC00-625063 | Page-No. 1/1

A1 (841 x 594mm)

BELT WIDE	Type	A	B	C	D	N	PULLEY DIA	CONV,NO	Q'TY
1200	UC-SA1200	1211	1300	1900		12			

NO.	DECCRIPTION	SIZE	MAT'L	Q'TY	TOTAL WEIGHT (Kg) UNIT	TOTAL	REMARK
1	Scraper tip		WC+Ni+Co	N			100mm (L-TYPE)
2	Tip mounting screw		SUS304	2N			M6x18 SW,N
3	Rubber cushion		NR	N			SUS304 (w/arm)
4	Rubber cushion mounting bolt		SUS304	2N			M12X20 SW,W
5	Cleaner body		SS400	1			
6	Bearing		SS400	2			
7	Set bolt		SUS304	2			M12X45 SW,N
8	Fulorum bolt		SUS304	2			M8 X70 UN,2W
9	Pressure adjustment bracket		SS400	2			
10	Spring push plate		SS400	2			
11	Stopper bolt		SUS304	2			M12X65 N
12	Plate mounting bolt		SUS304	2			M8X50 SW
13	Spring		SWP-A	2			
14	Guide		PE	4			
15	Guide bolt		SUS304	8			M8X45 SW
16	Adjustment bracket mounting bolt		SUS304	4			M12X30 SW,W
17	Pressure adjustment bolt		SUS304	2			M16X110 N
18	Polyothylene Sheet		P.E	1			2T

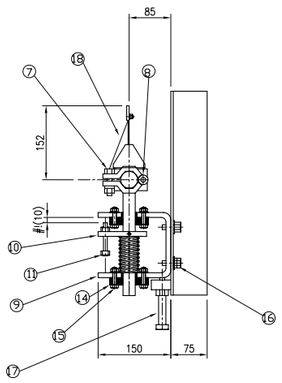

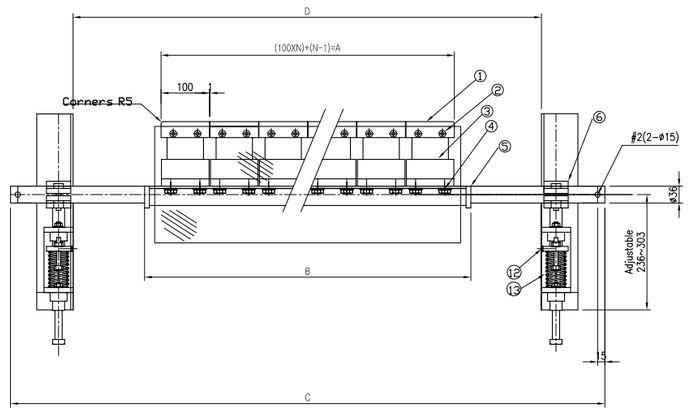

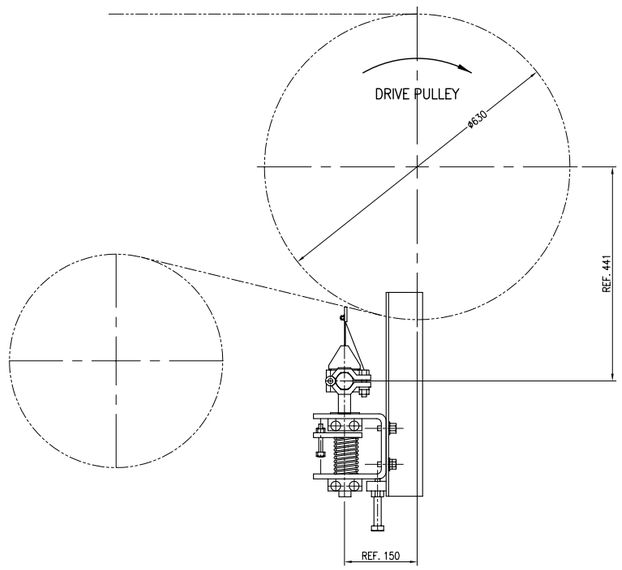

NOTE. (설치시 주의사항.)

1. #1 : 10mm GAP SHOULD BE KEPT AT INSTALLATION.
   (MAX. WORNOUT RANGE OF TIP IS MAX. 10mm)
2. #1 : ADJUSTING METHOD OF 10mm GAP
   -> MAKE 10mm GAP BETWEEN PRESSURE LEVER AND
   STOPPER NUT BY ROTATING OF THE BOLT.
3. #2 : END BOLT
   1) ONLY FOR HANGING IN PAINTING WORK AT SHOP
   2) WHEN SET UP, IT IS FOR CONVENIENCE OF MOVING OR INSTALLATION

MFG. Q'TY : TOTAL = 10 SETS

ITEM NO.	Q'TY	REF. DWG. NO.
CV-01A	1	T10206-UC02-P0ECC11-623301
CV-01B	1	T10206-UC02-P0ECC11-623302
CV-02A	1	T10206-UC02-P0ECC21-623301
CV-02B	1	T10206-UC02-P0ECC22-623301
CV-06A	1	T10206-UC02-P0ECC60-623301
CV-06B	1	T10206-UC02-P0ECC60-623301
TR-01A	1	-
TR-01B	1	-
TR-02A	1	-
TR-02B	1	-

FOR CONSTRUCTION

THIS DRAWING IS THE PROPERTY OF DOOSAN HEAVY INDUSTRIES & CONSTRUCTION CO., LTD.
IT IS NOT TO BE COPIED OR USED IN ANY WAY DETRIMENTAL TO THE COMPANY.

NO	REVISION	BY

KEC

ULTRA CLEANER
("SA" type B/W500~1600)

KEC (KOREA ENGINEERING CORPORATION)

DESIGNED	H.S.PARK	CONTRACT NO	SCALE	DATE	REV.
DRAWN	H.S.PARK				0
CHECKED	J.W.JEH	DWG. NO :			

Rev.	Date	Prepared	Checked	Approved	Details of Revision
0	05.02.2013	ILSIN	Y.I.MIN	J.S.PARK	FOR CONSTRUCTION

Owner: AES-VCM MONG DUONG POWER COMPANY LIMITED

Consultant: POWER ENGINEERING CONSULTING JOINT STOCK COMPANY 2

Contractor: Doosan Heavy Industries & Construction Co., Ltd.

Project: MONG DUONG II 2x560MW(NET) COAL FIRED POWER PROJECT

Orig-Pc: T10206
PC: XW03
Type: ECC
Contents Code: P0

	Date	Name
Drawn	30.04.2012	ILSIN
Checked	30.04.2012	Y.I.MIN
Approved	30.04.2012	J.S.PARK
Dept.		

Scale: NONE

Title: COAL HANDLING SYSTEM SECONDARY BELT CLEANER ASSEMBLY DRAWING (BW=1200)

Reg. No: 625064

Doosan Heavy Industries & Construction Co., Ltd. | Dept. | Unid | Rev. 0 | Version

Drawing No.: T10206-XW03-P0ECC00-625064

Page-No.: 1/1

A1 (841 x 594mm)

BELT WIDE	Type	A	B	C	D	N	PULLEY DIA	CONV,NO	Q'TY
1200	UC-SA1200	1211	1300	1900		12			

NO.	DECCRIPTION	SIZE	MAT'L	Q'TY	TOTAL WEIGHT (Kg) UNIT	TOTAL WEIGHT (Kg) TOTAL	REMARK
1	Scraper tip		WC+Ni+Co	N			100mm (L-TYPE)
2	Tip mounting screw		SUS304	2N			M6x18 SW,N
3	Rubber cushion		NR	N			SUS304 (w/arm)
4	Rubber oushion mounting bolt		SUS304	2N			M12X20 SW,W
5	Cleaner body		SS400	1			
6	Bearing		SS400	2			
7	Set bolt		SUS304	2			M12X45 SW,N
8	Fulorum bolt		SUS304	2			M8 X70 UN,2W
9	Pressure adjustment braoket		SS400	2			
10	Spring push plate		SS400	2			
11	Stopper bolt		SUS304	2			M12X65 N
12	Plate mounting bolt		SUS304	2			M8X50 SW
13	Spring		SWP-A	2			
14	Guide		PE	4			
15	Guide bolt		SUS304	8			M8X45 SW
16	Adjustment braoket mounting bolt		SUS304	4			M12X30 SW,W
17	Pressure adjustment bolt		SUS304	2			M16X110 N
18	Polyothylene Sheet		P.E	1			2T

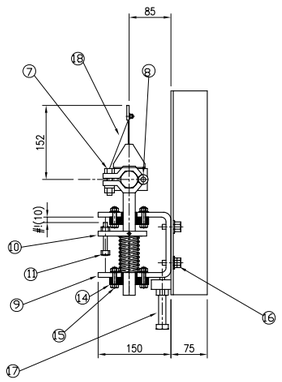

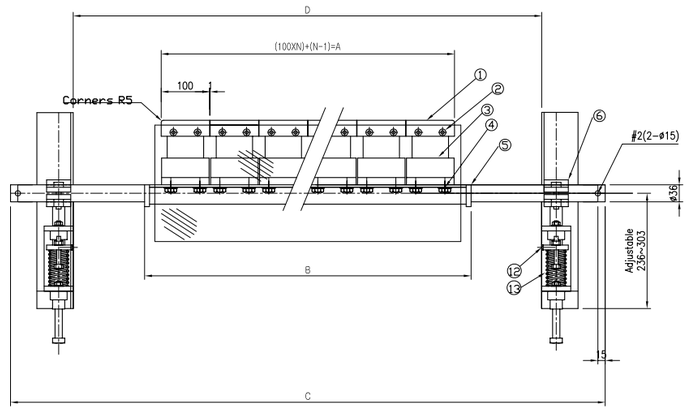

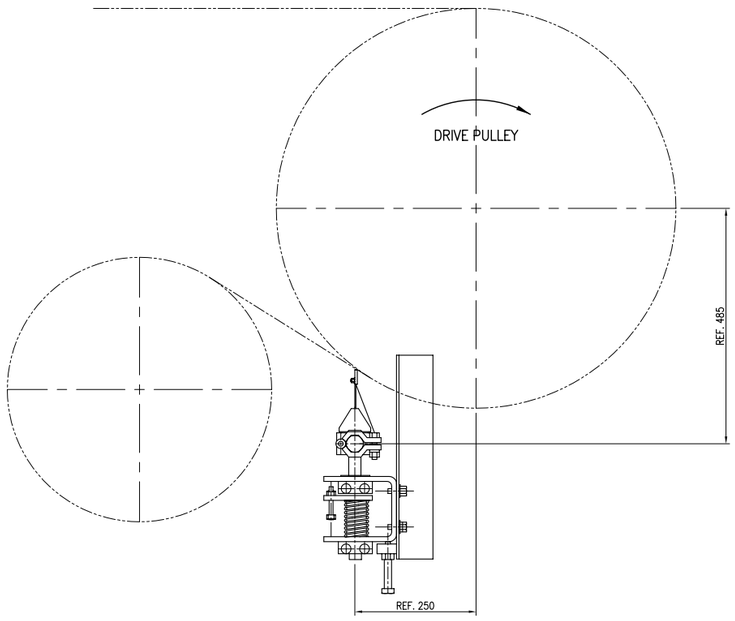

NOTE. (설치시 주의사항.)

1. #1 : 10mm GAP SHOULD BE KEPT AT INSTALLATION.
   (MAX. WORNOUT RANGE OF TIP IS MAX. 10mm)
2. #1 : ADJUSTING METHOD OF 10mm GAP
   -> MAKE 10mm GAP BETWEEN PRESSURE LEVER AND
   STOPPER NUT BY ROTATING OF THE BOLT.
3. #2 : END BOLT
   1) ONLY FOR HANGING IN PAINTING WORK AT SHOP
   2) WHEN SET UP, IT IS FOR CONVENIENCE OF MOVING OR INSTALLATION

MFG. Q'TY : TOTAL = 4 SETS

ITEM NO.	Q'TY	REF. DWG. NO.
CV-04A	1	T10206-UC02-P0ECC40-623031
CV-04B	1	T10206-UC02-P0ECC40-623031
CV-05A	1	T10206-UC02-P0ECC51-623301
CV-05B	1	T10206-UC02-P0ECC52-623302

FOR CONSTRUCTION

THIS DRAWING IS THE PROPERTY OF DOOSAN HEAVY INDUSTRIES & CONSTRUCTION CO., LTD.
IT IS NOT TO BE COPIED OR USED IN ANY WAY DETRIMENTAL TO THE COMPANY.

NO	REVISION	BY

KEC

ULTRA CLEANER
("SA" type B/W500~1600)

KEC (KOREA ENGINEERING CORPORATION)

DESIGNED	H.S.PARK	CONTRACT NO	SCALE	DATE	REV.
DRAWN	H.S.PARK				0
CHECKED	J.W.JEH	DWG. NO :			

Rev.	Date	Prepared	Checked	Approved	Details of Revision
0	05.02.2013	ILSIN	Y.I.MIN	J.S.PARK	FOR CONSTRUCTION

Owner: AES-VCM MONG DUONG POWER COMPANY LIMITED

Consultant: POWER ENGINEERING CONSULTING JOINT STOCK COMPANY 2

Contractor: Doosan Heavy Industries & Construction Co., Ltd.

Project: MONG DUONG II 2x560MW(NET) COAL FIRED POWER PROJECT

Orig-Pc: T10206
PC: XW03
Type: ECC
Contents Code: P0

	Date	Name
Drawn	30.04.2012	ILSIN
Checked	30.04.2012	Y.I.MIN
Approved	30.04.2012	J.S.PARK

Scale: NONE

Title: COAL HANDLING SYSTEM SECONDARY BELT CLEANER ASSEMBLY DRAWING (BW=1200)

Reg. No: 625065

Rev.: 0 Version:

Dept.

Doosan Heavy Industries & Construction Co., Ltd.

Dept. Unid

Drawing No.: T10206-XW03-P0ECC00-625065

Page-No. 1/1

A1 (841 x 594mm)

BELT WIDE	Type	A	B	C	D	N	PULLEY DIA	CONV,NO	Q'TY
1400	UC-SA1400	1413	1500	2100		14			

NO.	DECCRIPTION	SIZE	MAT'L	Q'TY	TOTAL WEIGHT (Kg) UNIT	TOTAL	REMARK
1	Scraper tip		WC+Ni+Co	N			100mm (L-TYPE)
2	Tip mounting screw		SUS304	2N			M6x18 SW,N
3	Rubber cushion		NR	N			SUS304 (w/arm)
4	Rubber oushion mounting bolt		SUS304	2N			M12X20 SW,W
5	Cleaner body		SS400	1			
6	Bearing		SS400	2			
7	Set bolt		SUS304	2			M12X45 SW,N
8	Fulorum bolt		SUS304	2			M8 X70 UN,2W
9	Pressure adjustment bracket		SS400	2			
10	Spring push plate		SS400	2			
11	Stopper bolt		SUS304	2			M12X65 N
12	Plate mounting bolt		SUS304	2			M8X50 SW
13	Spring		SWP-A	2			
14	Guide		PE	4			
15	Guide bolt		SUS304	8			M8X45 SW
16	Adjustment bracket mounting bolt		SUS304	4			M12X30 SW,W
17	Pressure adjustment bolt		SUS304	2			M16X110 N
18	Polyothylene Sheet		P.E	1			2T

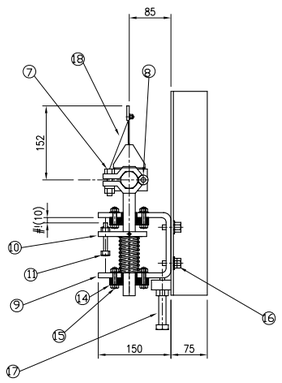

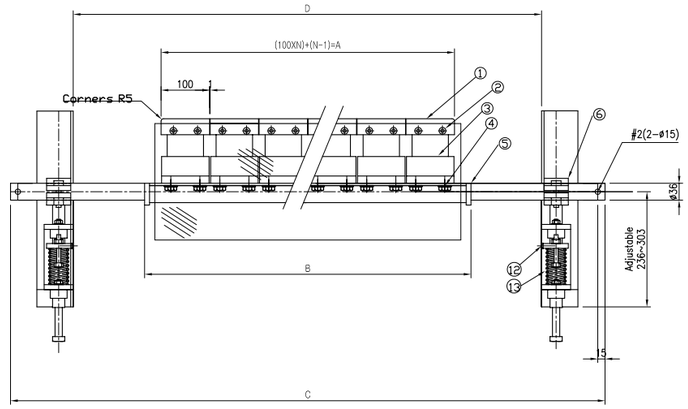

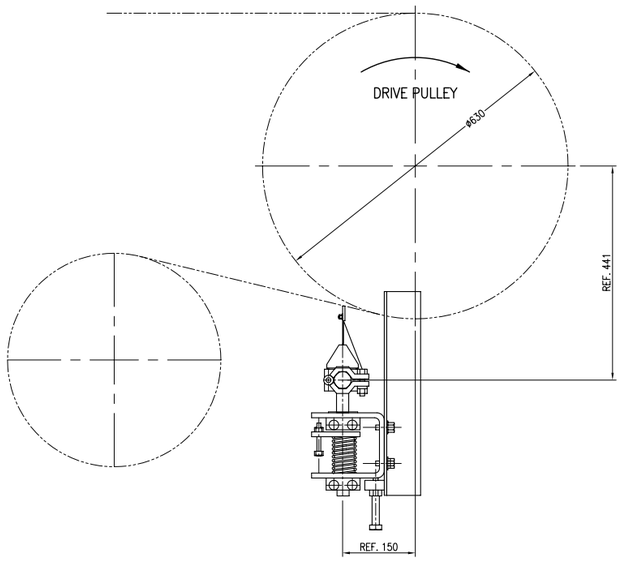

NOTE. (설치시 주의사항.)

1. #1 : 10mm GAP SHOULD BE KEPT AT INSTALLATION.
   (MAX. WORNOUT RANGE OF TIP IS MAX. 10mm)
2. #1 : ADJUSTING METHOD OF 10mm GAP
   -> MAKE 10mm GAP BETWEEN PRESSURE LEVER AND
   STOPPER NUT BY ROTATING OF THE BOLT.
3. #2 : END BOLT
   1) ONLY FOR HANGING IN PAINTING WORK AT SHOP
   2) WHEN SET UP, IT IS FOR CONVENIENCE OF MOVING OR INSTALLATION

MFG. Q'TY : TOTAL = 2 SETS

ITEM NO.	Q'TY	REF. DWG. NO.
CF-01A	1	T10206-UC02-P0ECC71-623301
CF-01B	1	T10206-UC02-P0ECC72-623302

FOR CONSTRUCTION

THIS DRAWING IS THE PROPERTY OF DOOSAN HEAVY INDUSTRIES & CONSTRUCTION CO., LTD.
IT IS NOT TO BE COPIED OR USED IN ANY WAY DETRIMENTAL TO THE COMPANY.

NO	REVISION	BY

KEC

ULTRA CLEANER
("SA" type B/W500~1600)

KEC (KOREA ENGINEERING CORPORATION)

DESIGNED	H.S.PARK	CONTRACT NO	SCALE	DATE	REV.
DRAWN	H.S.PARK				0
CHECKED	J.W.JEH	DWG. NO :			

Rev.	Date	Prepared	Checked	Approved	Details of Revision
0	05.02.2013	ILSIN	Y.I.MIN	J.S.PARK	FOR CONSTRUCTION

Owner: AES-VCM MONG DUONG POWER COMPANY LIMITED

Consultant: POWER ENGINEERING CONSULTING JOINT STOCK COMPANY 2

Contractor: Doosan Heavy Industries & Construction Co., Ltd.

Project: MONG DUONG II 2x560MW(NET) COAL FIRED POWER PROJECT

Orig-Pc: T10206
PC: XW03
Type: ECC
Contents Code: P0

	Date	Name
Drawn	30.04.2012	ILSIN
Checked	30.04.2012	Y.I.MIN
Approved	30.04.2012	J.S.PARK
Dept.		

Scale: NONE

Title: COAL HANDLING SYSTEM SECONDARY BELT CLEANER ASSEMBLY DRAWING (BW=1400)

Reg. No: 625066

Doosan Heavy Industries & Construction Co., Ltd. | Dept. | Unid | Rev. 0 | Version

Drawing No.: T10206-XW03-P0ECC00-625066 | Page-No. 1/1

A1 (841 x 594mm)